Automatización Mantenimiento y Construcción S.A. de C.V.
Av. siglo 21 #50
Condominio industrial siglo 21
Tlajomulco de zuñiga, Jalisco, México.
C.P. 45640
Tel. (+52) 333-120-1000

PEGATRON

Manufacturer (Company)	Automatización Mantenimiento y Construcción S.A. de C.V.
Project name	ATLAS CP
Station name	ST 30
Production order	978
Company/Client	Pegatron
Electrical data	
Phases	2+N+GND
Frequency (Hz)	60 Hz
Voltage (V)	230V
Current (A)	43 Amp
Pneumatic data	
Pressure (Bar)	6 - 8 Bar

Created	05/01/2026
Modified	02/06/2026

Number of pages 123

Table Of Contents

Assignment	Page	Page Description	Date
	1	Front Page	01/06/2026
	1	Table Of Contents	02/06/2026
	1.a	Table Of Contents	01/06/2026
	1.b	Table Of Contents	01/06/2026
	1.c	Table Of Contents	01/06/2026
	1.d	Table Of Contents	02/06/2026
	1	Structure Identification	01/06/2026
	2	PLC Signals	01/06/2026
	3	PLC Signals	01/06/2026
	4	PLC Signals	01/06/2026
	5	PLC Signals	01/06/2026
=LAYOUT +GC		Control Cabinet	
	1	Control plate visualization	01/06/2026
=BOM			
	1	Component List	01/06/2026
	1.a	Component List	01/06/2026
	1.b	Component List	01/06/2026
	1.c	Component List	01/06/2026
	1.d	Component List	02/06/2026
	1.e	Component List	02/06/2026
	1.f	Component List	02/06/2026
	1.g	Component List	02/06/2026
	1.h	Component List	02/06/2026
	1.i	Component List	02/06/2026
	1.j	Component List	02/06/2026
	1.k	Component List	02/06/2026
	1.l	Component List	02/06/2026
	1.m	Component List	02/06/2026

Table Of Contents

Assignment	Page	Page Description	Date
=220VCA +GC		Control Cabinet	
	1	Main supply power cabinet	30/03/2026
	2	220 VAC Miniature circuit breakers connections	30/03/2026
	2.a	220 VAC Miniature circuit breakers connections	31/03/2026
	3	Terminal connections	30/03/2026
	3.a	Terminal connections	30/03/2026
	4	Power supply connections	31/03/2026
	5	220 VAC Fuses connections	31/03/2026
	6	VFD1 connections	01/06/2026
=220VCA +SST		Station structure	
	1	CPU and monitor connections	31/03/2026
	1.a	CPU and monitor connections	31/03/2026
	2	220 Outlet connections	01/06/2026
	2.a	220 Outlet connections	01/06/2026
	3	Welder controller connections	01/06/2026
	4	Robot controller connections	01/06/2026
	5	Air extractor connections	31/03/2026
	6	Motor connections	06/01/2026
=110VCA +GC		Control Cabinet	
	1	110 VAC Fuses connections	31/03/2026
=110VCA +SST		Station structure	
	1	110 VAC Fan connections	30/03/2026
	2	Station luminary connections	31/03/2026
	3	110 VAC Outlet connections	07/01/2026
=24VCD +GC		Control Cabinet	
	1	24 VDC Miniature circuit breakers connections	31/03/2026
	2	24 VDCFuses connections	31/03/2026
	3	24 VDC Terminals connections	01/06/2026
	4	0 VDC Terminals connections	31/03/2026

Table Of Contents

Assignment	Page	Page Description	Date
=24VCD +GC		Control Cabinet	
	5	Programmable logic controller connections	30/03/2026
	5.a	PLC/Digital inputs connections	31/03/2026
	5.b	PLC/Digital inputs connections	31/03/2026
	5.d	PLC/Digital outputs connections	31/03/2026
	5.e	PLC/Digital outputs connections	08/01/2026
	5.f	Programmable logic controller connections	31/03/2026
	5.g	PLC/Digital inputs connections	12/01/2026
	5.h	PLC/Digital inputs connections	12/01/2026
	5.i	PLC/Digital outputs connections	12/01/2026
	5.j	PLC/Digital outputs connections	12/01/2026
	5.k	I/O Module connections	30/03/2026
	5.l	I/O Module inputs connections	09/01/2026
	5.m	I/O Module inputs connections	12/01/2026
	5.n	I/O Module outputs connections	23/03/2026
	5.o	I/O Module outputs connections	19/02/2026
	6	Safety terminal connections	19/02/2026
	6.a	Safety terminal connections	31/03/2026
	6.b	Safety terminal connections	01/06/2026
	7	Safety relay connections SR1	26/01/2026
	7.a	Safety relay connections SR2	31/03/2026
	8	Power relay connections	31/03/2026
	8.a	Power relay connections	31/03/2026
	8.b	Power relay connections	31/03/2026
	8.c	Power relay connections	31/03/2026
	8.d	Power relay connections	31/03/2026
	8.e	Power relay connections	31/03/2026
	8.f	Power relay connections	31/03/2026
	8.g	Power relay connections	31/03/2026

Table Of Contents

Assignment	Page	Page Description	Date
=24VCD +GC		Control Cabinet	
	9	Vision system connections	31/03/2026
	10	Rele connections KS1	01/06/2026
	10.a	Rele connections KS1a	01/06/2026
	10.b	Rele connections KS2	01/06/2026
	10.c	Rele connections KS3	01/06/2026
	12	Ethernet switch connections	30/03/2026
=24VCD +GO		Operation Cabinet	
	1	Buttons	01/06/2026
	2	Operation interface onnections	31/03/2026
=24VCD +SST		Station structure	
	1	Interlock connections	01/06/2026
	1.a	Interlock connections	01/06/2026
	3	Signal turret connections	31/03/2026
	5	Warnlight connections	05/01/2026
	6	Camera connections	31/03/2026
	7	Code reader connections	31/03/2026
	8	IO-Link I/O Hub 1	30/03/2026
	8.a	IO-Link I/O Hub 1	01/06/2026
	8.b	IO-Link I/O Hub 1	01/06/2026
	8.c	IO-Link I/O Hub 2	16/02/2026
	8.d	IO-Link I/O Hub 2	01/06/2026
	8.e	IO-Link I/O Hub 2	01/06/2026
	8.f	IO-Link I/O Hub 3	16/02/2026
	8.g	IO-Link I/O Hub 3	01/06/2026
	8.h	IO-Link I/O Hub 3	01/06/2026
	9	Sensor connections	30/03/2026
	10	Leak tester connections	30/03/2026
	11	Welder controller connections	30/03/2026

Table Of Contents

Assignment	Page	Page Description	Date
=24VCD +SST		Station structure	
	12	Robot controller connections	01/06/2026
	13	Harting connections	31/03/2026
	14	Conector connections	01/06/2026
	15	DB9 conector connections	02/06/2026
	15.a	DB9 conector connections	30/03/2026
	16	DB9 conector connections	01/06/2026
=24VCD +PN		Pneumatic Plate	
	1	Mantenance unit connections	01/06/2026
	2	Solenoid connections	31/03/2026
=PNEU(Pneumatics) +SST		Station structure	
	1	Maintenance unit connections	01/06/2026
	2	Valve terminal connections	01/06/2026
	2.a	Valve terminal connections	01/06/2026
	2.b	Valve terminal connections	31/03/2026
	3	Layout cylinders	17/02/2026
	3.a	Layout cylinders	17/02/2026
	3.b	Layout cylinders	17/02/2026
	3.d	Cylinders connections	01/06/2026
	3.e	Cylinders connections	01/06/2026
	3.f	Cylinders connections	19/02/2026
	4	Leak tester connections	31/03/2026

Structure Identifier Overview

Full Designation	Labeling	Structure Description
=LAYOUT	Higher-level function	Component Distribution
=BOM	Higher-level function	Materials list
=220VCA	Higher-level function	Voltage at 220V
=110VCA	Higher-level function	Voltage at 110V
=24VCD	Higher-level function	Voltage at 24V DC
=220VAC	Higher-level function	Voltage at 220 VAC
=24VDC	Higher-level function	Voltage at 24V DC
=PNEU(Pneumatics)	Higher-level function	
=110VAC	Higher-level function	Voltage at 110 VAC
=NEUM	Higher-level function	Neumática
+GC	Mounting location:	Control Cabinet
+GO	Mounting location:	Operation Cabinet
+SST	Mounting location:	Station structure
+OC	Mounting location:	Operation Cabinet
+ESTR	Mounting location:	Estructura de estación
+PN	Mounting location:	Pneumatic Plate
+CC	Mounting location:	Control Cabinet
+LCNV	Mounting location:	Transportador inferior
+TC	Mounting location:	Transportador superior
+PN12	Mounting location:	
&FRONT PAGE	Document type	Front Page
&TABLE OF CONTENTS	Document type	Table Of Contents
&INF	Document type	Project Information

PLC Address Summary

Connection Point	Sign/Laber	Data Type	Plc Signal Description	Variable Type
X20	X20	BOOL	VFD1/Relay output/A	Digital input
X21	X21	BOOL	RUN/VFD1	Digital input
X22	X22	BOOL	Available	Digital input
X23	X23	BOOL	=	Digital input
X24	X24	BOOL	=	Digital input
X25	X25	BOOL	=	Digital input
X26	X26	BOOL	=	Digital input
X27	X27	BOOL	=	Digital input
S/S	3013	BOOL	Common negative	Digital input
X30	X30	BOOL	Available	Digital input
X31	X31	BOOL	=	Digital input
X32	X32	BOOL	=	Digital input
X33	X33	BOOL	=	Digital input
X34	X34	BOOL	=	Digital input
X35	X35	BOOL	=	Digital input
X36	X36	BOOL	=	Digital input
X37	X37	BOOL	=	Digital input
Y20	Y20	BOOL	ON/OFF VFD 1	Digital output
Y21	Y21	BOOL	RH VFD 1	Digital output
Y22	Y22	BOOL	ON/OFF Air extractor	Digital output
Y23	Y23	BOOL	Voltage 5+	Digital output
Y25	Y25	BOOL	Voltage 48V-	Digital output
Y24	Y24	BOOL	Voltage 48V+	Digital output
+V1	1014	BOOL	Common positive	COM
+V0	1010	BOOL	=	COM
Y26	Y26	BOOL	Continuity test	Digital output
Y27	Y27	BOOL	Available	Digital output

PLC Address Summary

Connection Point	Sign/Laber	Data Type	Plc Signal Description	Variable Type
Y30	Y30	BOOL	Open valve 9	Digital output
Y31	Y31	BOOL	Close valve 9	Digital output
Y32	Y32	BOOL	Available	Digital output
Y33	Y33	BOOL	=	Digital output
Y35	Y35	BOOL	=	Digital output
Y34	Y34	BOOL	=	Digital output
+V3	1018	BOOL	Common positive	COM
+V2	1017	BOOL	=	COM
Y36	Y36	BOOL	Available	Digital output
Y37	Y37	BOOL	=	Digital output
X2	X02	BOOL	PB1 / Start button	Digital input
X3	X03	BOOL	PB2 / Reset button	Digital input
X4	X04	BOOL	Open/close interlock 1	Digital input
X1	X01	BOOL	Interlock safety cicuit	Digital input
X0	X00	BOOL	Emergency stop circuit Safety relay SR1	Digital input
X5	X05	BOOL	Open/close interlock 2	Digital input
X6	X06	BOOL	Open/close interlock 3	Digital input
X7	X07	BOOL	Fail part/Leak tester	Digital input
0V	3003	BOOL	Common negative	S/S
NC	NC	BOOL	Not connect	Digital input
X14	X14	BOOL	Status I	Digital input
X13	X13	BOOL	State power on -WC1	Digital input
X12	X12	BOOL	End of cycle/Leak tester	Digital input
X11	X11	BOOL	Pass part/Leak tester	Digital input
X10	X10	BOOL	Maintenance unit	Digital input
X16	X16	BOOL	Open/close interlock 4	Digital input
NC	NC	BOOL	Not connect	Digital input

PLC Address Summary

Connection Point	Sign/Laber	Data Type	Plc Signal Description	Variable Type
X15	X15	BOOL	Status II	Digital input
X17	X17	BOOL	Available	Digital input
Y0	Y00	BOOL	ON/OFF-LF1 K1	Digital output
Y5	Y05	BOOL	Remote reset of -LT1	Digital output
Y6	Y06	BOOL	Remote start of -LT1	Digital output
Y7	Y07	BOOL	Remote program select 1 -LT1	Digital output
Y1	Y01	BOOL	Activate green led light SL1	Digital output
Y2	Y02	BOOL	Activate yellow led light SL1	Digital output
Y3	Y03	BOOL	Activate red led light SL1	Digital output
Y4	Y04	BOOL	Activate light siren SL1	Digital output
24V	1004	BOOL	Common positive	+V1
Y10	Y10	BOOL	Remote program select -LT1	Digital output
Y15	Y15	BOOL	Pilot laser -WC1	Digital output
Y11	Y11	BOOL	Bypass interlock	Digital output
Y12	Y12	BOOL	Power on -WC1	Digital output
Y13	Y13	BOOL	Laser On-WC1	Digital output
24V	1012	BOOL	Common positive	+V3
Y16	Y16	BOOL	Available	Digital output
Y17	Y17	BOOL	=	Digital output
Y14	Y14	BOOL	Reset -WC1	Digital output
24V	1003	BOOL	Common positive	+V0
24V	1011	BOOL	=	+V2
NC	NC	BOOL	Not connect	Digital input
02	I0.2	BOOL	Available	Digital input
03	I0.3	BOOL	=	Digital input
04	I0.4	BOOL	=	Digital input
01	I0.1	BOOL	Interlock safety circuit	Digital input

PLC Address Summary

Connection Point	Sign/Laber	Data Type	Plc Signal Description	Variable Type
00	I0.0	BOOL	Emergency stop circuit Safety relay SR1	Digital input
05	I0.5	BOOL	Available	Digital input
06	I0.6	BOOL	=	Digital input
07	I0.7	BOOL	=	Digital input
10	I1.0	BOOL	=	Digital input
11	I1.1	BOOL	=	Digital input
12	I1.2	BOOL	=	Digital input
09	I0.9	BOOL	=	Digital input
08	I0.8	BOOL	=	Digital input
13	I1.3	BOOL	=	Digital input
COM	3004	BOOL	Common negative	Digital input
01	O0.1	BOOL	Available	Digital output
02	O0.2	BOOL	=	Digital output
03	O0.3	BOOL	=	Digital output
04	O0.4	BOOL	=	Digital output
00	O0.0	BOOL	=	Digital output
05	O0.5	BOOL	=	Digital output
06	O0.6	BOOL	=	Digital output
07	O0.7	BOOL	=	Digital output
09	O0.9	BOOL	=	Digital output
CO (0V)	3010	BOOL	Common negative	Digital output
08	O0.8	BOOL	Available	Digital output

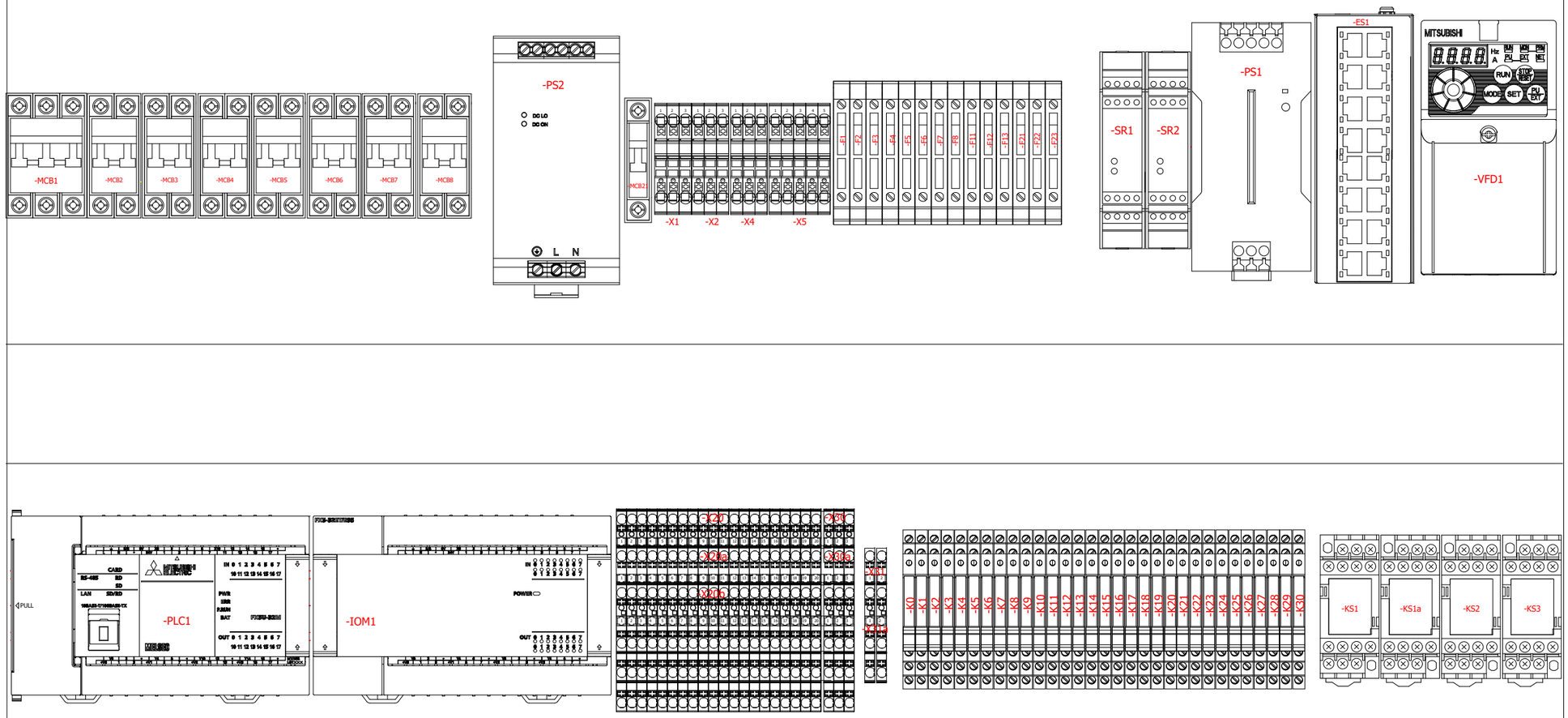

Automatyco®	Automatización, Mantenimiento y Construcción Condominio Industrial Siglo 21, Av. Siglo 21 #50 int #115, Valle de Santa Cruz, CP 45640 Tlajomulco de Zuñiga, Jal, Mex.	O.P. 978	Created	29/05/2026	Project's name	Page name	Facility LAYOUT
		Client: Pegatron	Modified	02/06/2026	ATLAS CP	Control plate visualization	Mounting location GC
		PEGATRON	Revision	0	Station name		Sheet 1
			Responsible	A.Yepez	ST 30		Page 12 / 123

Sum list of items

Order Number	Amount	Designation	Type Number	Marker	Image
SH203-C6	01	Miniature circuit breaker	SH203-C6	ABB	
SH202-C2	01	Miniature circuit breaker	SH202-C2	ABB	
SH202-C4	03	Miniature circuit breaker	SH202-C4	ABB	
SH202-C6	02	Miniature circuit breaker	SH202-C6	ABB	
SH202-C10	01	Miniature circuit breaker	SH202-C10	ABB	
SH201-C10	01	Miniature circuit breaker	SH201-C10	ABB	
F620	01	Leak tester	F620	ATEQ	

Sum list of items

Order Number	Amount	Designation	Type Number	Marker	Image
R125-4S	18	Test probe	R125-4S	Asixxsix	
BH1M-DDT	01	Photoelectric sensor	BH1M-DDT	Autonics	
5492C	01	Multimeter	5492C	BK Precision	
1737	01	Power supply	1737	BK Precision	
PD30CTBR20BPA2IO	01	Sensor de presencia	PD30CTBR20BPA2IO	Carlo Gavazzi	
COMPACT EVO AC	01	Laser welding machine	COMPACT EVO AC	Coherent	
Galvo Scanner Pyro	01	Processing head	Galvo Scanner Pyro	Coherent	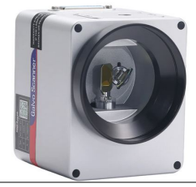

Sum list of items

Order Number	Amount	Designation	Type Number	Marker	Image
DH45-4T/W-J+B	01	Signal turret	DH45-4T/W-J+B	DMWD	
DBS-R9045R	01	Circular light	DBS-R9045R	Danbes	
DPSF05A-E1	31	Power relay	DPSF05A-E1	Degson	
E2020H	02	Monitor	E2020H	Dell	
OptiPlex 7000	02	PC	OptiPlex 7000	Dell	
EAC3000-02D	01	Maintenance unit	EAC3000-02D	E.MC	
RV5322C-06E4	01	Valve	RV5322C-06E4	EMC	

Sum list of items

Order Number	Amount	Designation	Type Number	Marker	Image
263467	01	Emergency stop push button	M22-PVT	Eaton	
216378	03	NC contact element	M22-K01	Eaton	
216374	03	Mounting clamp	M22-A	Eaton	
216376	04	NA Contact element	M22-K10	Eaton	
216596	01	Green push button	M22-D-G	Eaton	
216598	01	Yellow push button	M22-D-Y	Eaton	
085613	02	Safety relay	ESM-BA301	Euchner	

Sum list of items

Order Number	Amount	Designation	Type Number	Marker	Image
174014	04	Safety switch	CTS-C1-BR-CC-FLX-AP-VSA	Euchner	
167919	04	Actuator	A-FLX-D-0C	Euchner	
189227	05	Support for suction cup	ESH-HCL-3-QS	Festo	
8214722	05	Length compensator	VAL-M5-5-F1A	Festo	
160236	01	Compressed air accumulator	CRVZS-2	Festo	
566501	01	Air Solenoid Valve	VUVG-L14-P53C-T-G18-1P3	Festo	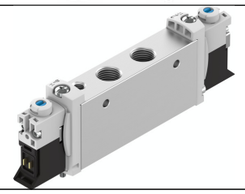
574334	10	Proximity sensor	SMT-8M-A-PS-24V-E-0,3-M8D	Festo	

Sum list of items

Order Number	Amount	Designation	Type Number	Marker	Image
551375	02	Proximity Sensor	SMT-10M-PS-24V-E-0,3-L-M8D	Festo	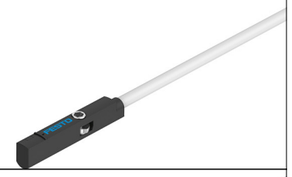
547860	02	Proximity Sensor	SMT-8G-PS-24V-E-0,3Q-M8D	Festo	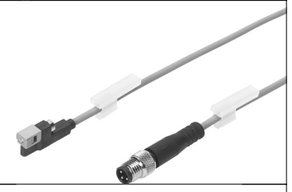
170913	01	Guided cylinder	DFM-16-80-P-A-KF	Festo	
543919	01	Mini slide	DGSL-6-40-PA	Festo	
170836	01	Guided drive	DFM-16-40-P-A-GF	Festo	
560216	01	Parallel clamp	HGPT-40-A-B	Festo	
1461995	01	Normalized cylinder	DSBC-40-300-PPSA	Festo	

Sum list of items

Order Number	Amount	Designation	Type Number	Marker	Image
19242	01	Normalized cylinder	DSNU-20-200-PPV-A	Festo	
8085198	01	Mini slide	DGST-25-200-Y12A	Festo	
8086638	01	Pressure regulator	MS2-LR-QS6-D6-AR-BARB	Festo	
8035534	01	Pressure sensor	SPAN-B2R-G18M-PNLK-PNVBA-L1	Festo	
LD001-6	01	Led luminary	LD001-6	ILLUX	
GSK-100-1204	18	Test probe	GSK-100-1204	Ingun	
KP-9000-45-16TX	01	Ethernet switch	KP-9000-45-16TX	KeepLINK	

Sum list of items

Order Number	Amount	Designation	Type Number	Marker	Image
GT2-71P	01	Amplifier unit	GT2-71P	Keyence	
DL-EN1	01	Communication unit	DL-EN1	Keyence	
OP-87360	01	Ethernet cable	OP-87360	Keyence	
GT2-S5	01	Digital contact sensor	GT2-S5	Keyence	
PR-G61CBD	01	Presence sensor	PR-G61CBD	Keyence	
PZ-M32P	01	Reflective sensor	PZ-M32P	Keyence	
PZ-V32P	03	Photoelectric sensor	PZ-V32P	Keyence	

Sum list of items

Order Number	Amount	Designation	Type Number	Marker	Image
LR-ZB250CP	01	Laser sensor	LR-ZB250CP	Keyence	
SR-X100W	01	Code reader	SR-X100W	Keyence	
GT2-CH5M	01	Connection cable	GT2-CH5M	Keyence	
OP-87225	01	Control cable	OP-87225	Keyence	
DPP120-24-1	01	Power supply	DPP120-24-1	Lambda	
FR-D720-042-NA	01	Variable speed /frequency drive	FR-D720-042-NA	Mitsubishi	
FX5-32ET/ESS	01	I/O Module	FX5-32ET/ESS	Mitsubishi	

Sum list of items

Order Number	Amount	Designation	Type Number	Marker	Image
FX5U-32MT/ESS	01	Programmable logic controller	FX5U-32MT/ESS	Mitsubishi	
GS2110-WTBD	01	Human machine interface	GS2110-WTBD	Mitsubishi	
MZ07LF-TE1	01	Robot	MZ07LF-TE1	Nachi	
CFDS-OP90-A	01	Robot controller	CFDS-OP90-A	Nachi	
FD19TP-FSJNE	01	Teach pendant	FD19TP-FSJNE	Nachi	
S8VK-C24024	01	Power supply	S8VK-C24024	Omron	
FZ-VS3 10M	01	Camera cable	FZ-VS3 10M	Omron	

Sum list of items

Order Number	Amount	Designation	Type Number	Marker	Image
NX1P2-9024DT	01	Programmable logic controller	NX1P2-9024DT	Omron	
FH-L550	01	Vision system controller	FH-L550	Omron	
FH-SM05R	01	Camera	FH-SM05R	Omron	
70104876	01	Fieldbus module	ICE3-8IOL-G65L-V1D	Pepperl+Fuchs	
313335	02	I/O Hub	ICA-16DI-G60A-IO	Pepperl+Fuchs	
800182	03	Optical sensor	VL18-54-M-LAS/40a/118/128	Pepperl+Fuchs	
300755	02	Female cordset	V15L-G-5M-PUR-U	Pepperl+Fuchs	

Sum list of items

Order Number	Amount	Designation	Type Number	Marker	Image
221645	21	Distributor Y	V1S-T-V3	Pepperl+Fuchs	
3004100	14	Fuse Terminal	UK5-HESI	Phoenix Contact	
3036026	05	Double-deck ground terminal	STTB 2,5-PE	Phoenix Contact	
2903308	04	Relay module	RIF-2-RPT-LDP-24DC/4X21	Phoenix Contact	
3244100	01	Air extractor	3244100	Rittal	
VQC2300N-51	08	Valve	VQC2300N-51	SMC	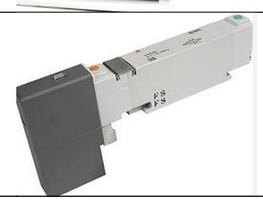
D-M9P	04	Proximity sensor	D-M9P	SMC	

Sum list of items

Order Number	Amount	Designation	Type Number	Marker	Image
VV5QC21-08C6SEAN	01	Manifold	VV5QC21-08C6SEAN	SMC	
MY1B32-650	02	Rodless cylinder	MY1B32-650	SMC	
3RG7420-7AA00	04	Photoelectric sensor	3RG7420-7AA00	Siemens	
3RG7641-3CC00	02	Proximity sensor	3RG7641-3CC00	Siemens	
FEUR 1	12	European type fuse	FEUR 1	Steren	
FEUR 4	01	European type fuse	FEUR 4	Steren	
FEUR 2	01	European type fuse	FEUR 2	Steren	

Sum list of items

Order Number	Amount	Designation	Type Number	Marker	Image
905-120	01	Polarized contact	905-120	Steren	
VNG-117M	01	Metal fan of 6”	VNG-117M	Steren	
360-070	01	EtherNet port	360-070	Steren	
RNYM009-17-15	01	Gear motor	RNYM009-17-15	Sumitomo	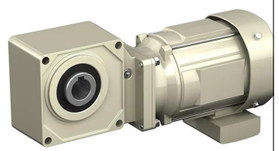
HM3514MPC	01	Camera lens	HM3514MPC	ZLKC	

WATCH OUT!

When disconnecting the main switch there is still voltage

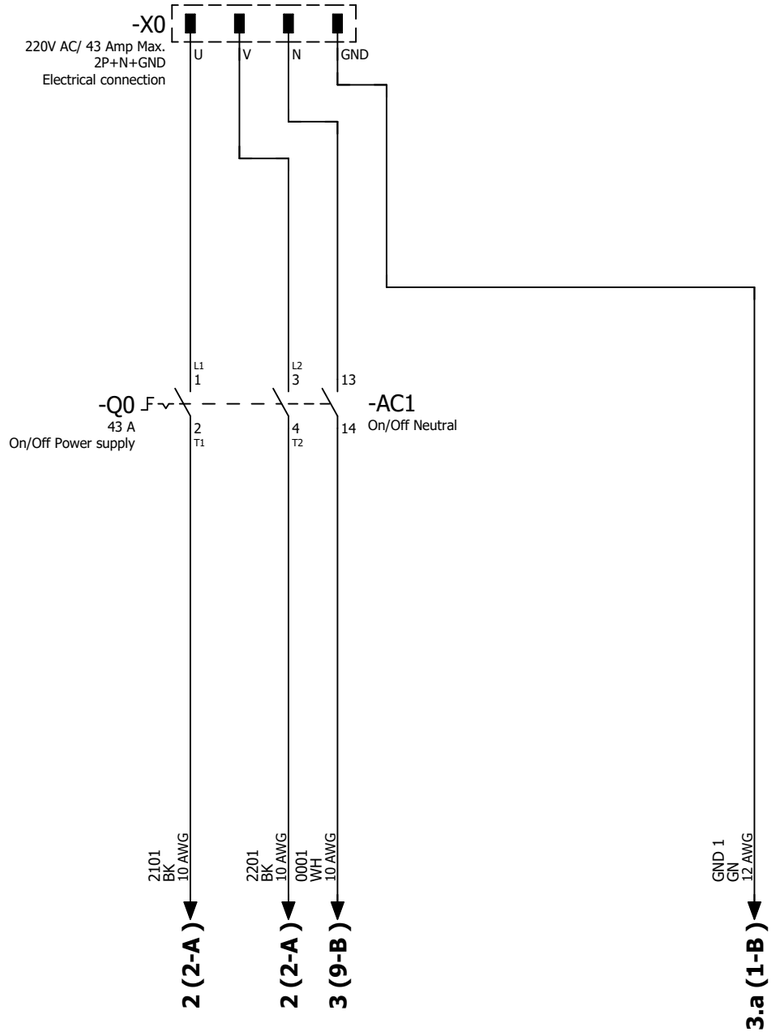

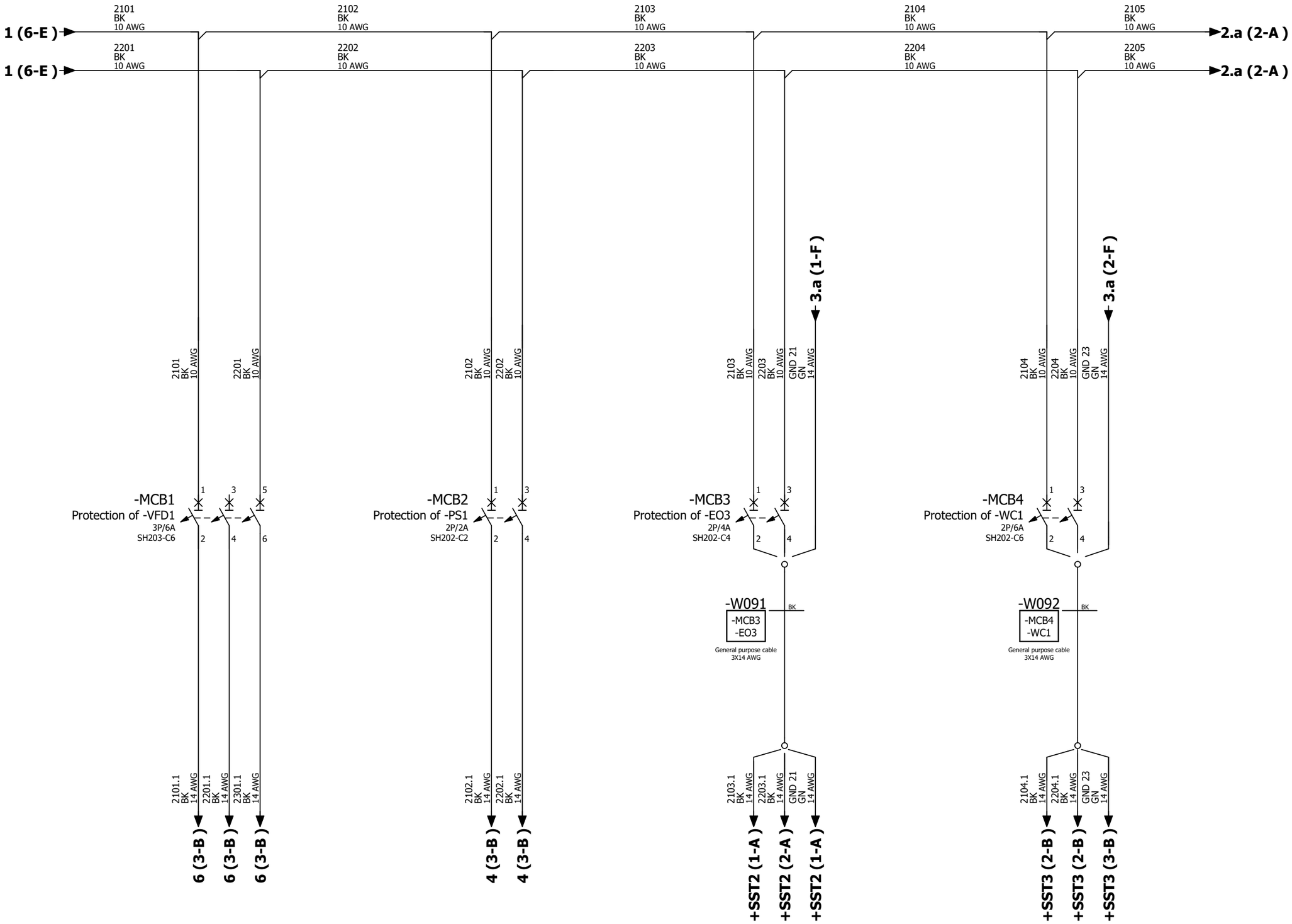

Automatyco®	Automatización, Mantenimiento y Construcción Condominio Industrial Siglo 21, Av. Siglo 21 #50 int #115, Valle de Santa Cruz, CP 45640 Tlajomulco de Zuñiga, Jal, Mex.	O.P. 978	Created 05/01/2026	Project's name ATLAS CP	Page name 220 VAC Miniature circuit breakers connections	Facility 220VCA
		Client: Pegatron	Modified 30/03/2026			Mounting location GC
		PEGATRON	Revision 0	Station name ST 30		Sheet 2
			Responsible A.Yepez			Page 28 / 123

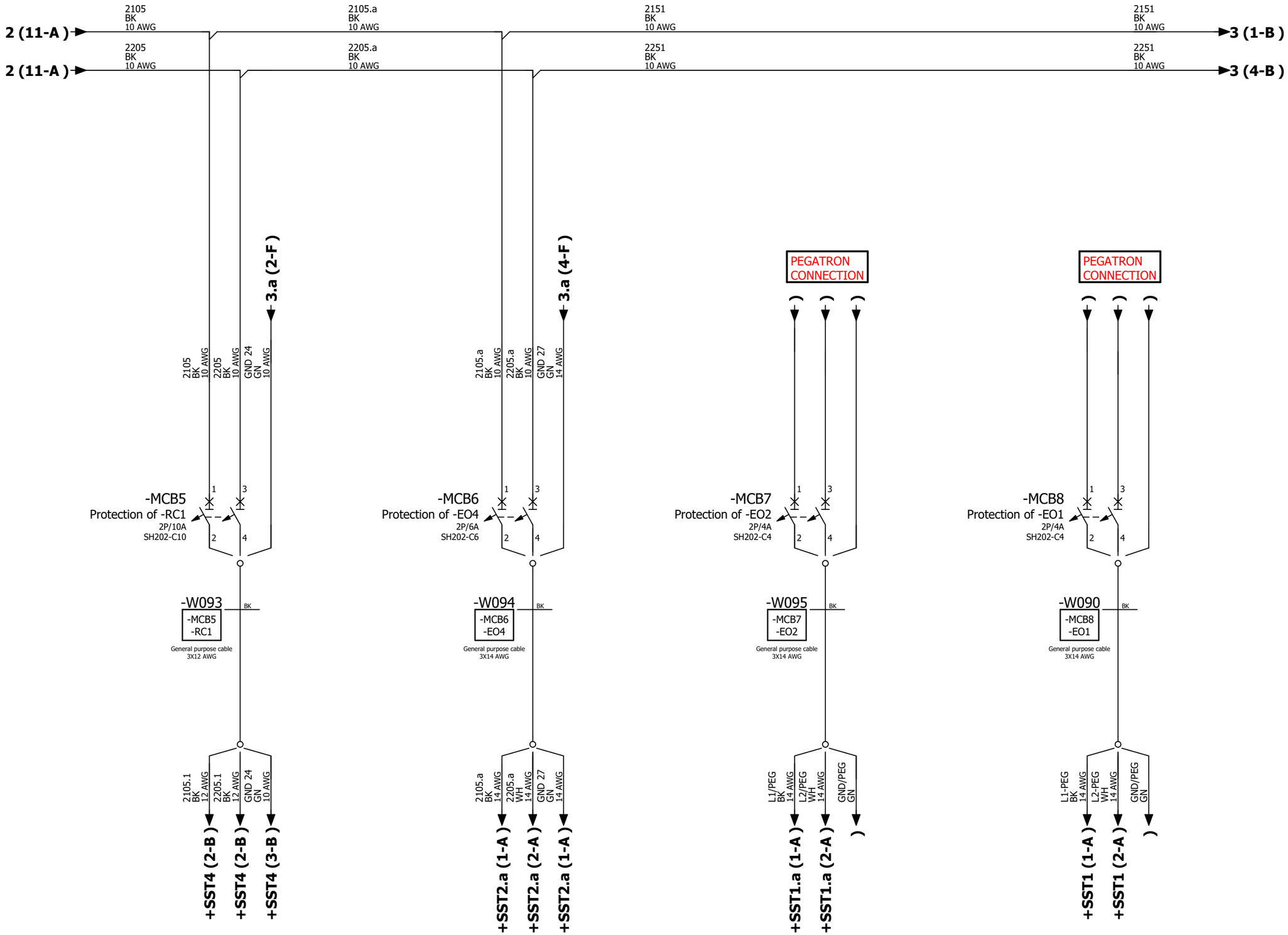

Automatyco®	Automatización, Mantenimiento y Construcción Condominio Industrial Siglo 21, Av. Siglo 21 #50 int #115, Valle de Santa Cruz, CP 45640 Tlajomulco de Zuñiga, Jal, Mex.	O.P. 978	Created	05/01/2026	Project's name	Page name
		Client: Pegatron	Modified	31/03/2026	ATLAS CP	220 VAC Miniature circuit breakers connections
		PEGATRON	Revision	0	Station name	
			Responsible	A.Yepez	ST 30	

Facility 220VCA
Mounting location GC
Sheet 2.a
Page 29 / 123

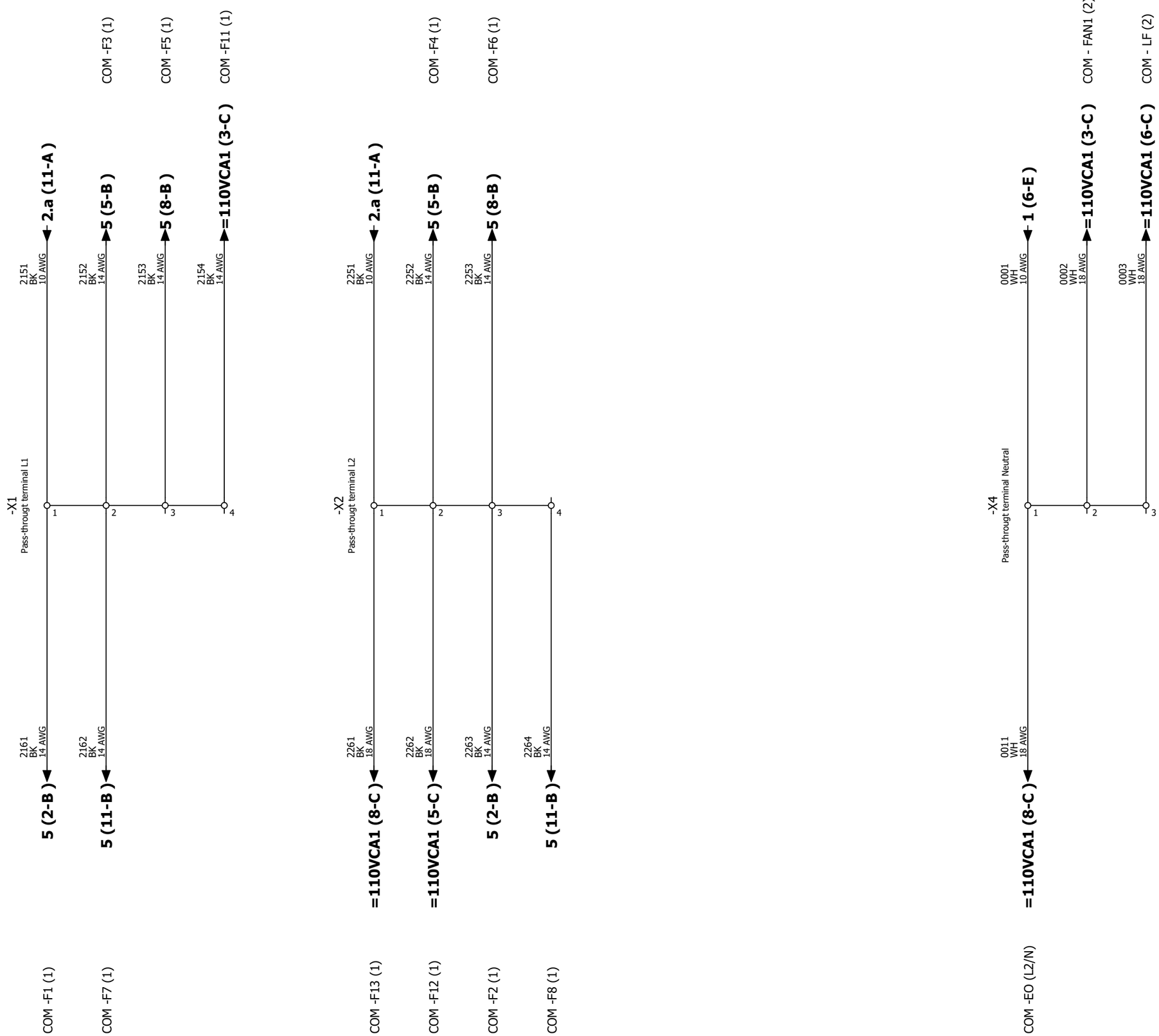

Automatyco®

Automatización, Mantenimiento y Construcción
Condominio Industrial Siglo 21, Av. Siglo 21 #50 int #115, Valle de Santa Cruz, CP 45640 Tlajomulco de Zuñiga, Jal, Mex.

O.P. 978	Created	05/01/2026	Project's name	Page name	Facility 220VCA
Client: Pegatron	Modified	30/03/2026	ATLAS CP	Terminal connections	Mounting location GC
PEGATRON	Revision	0	Station name		Sheet 3
	Responsible	A.Yepez	ST 30		Page 30 / 123

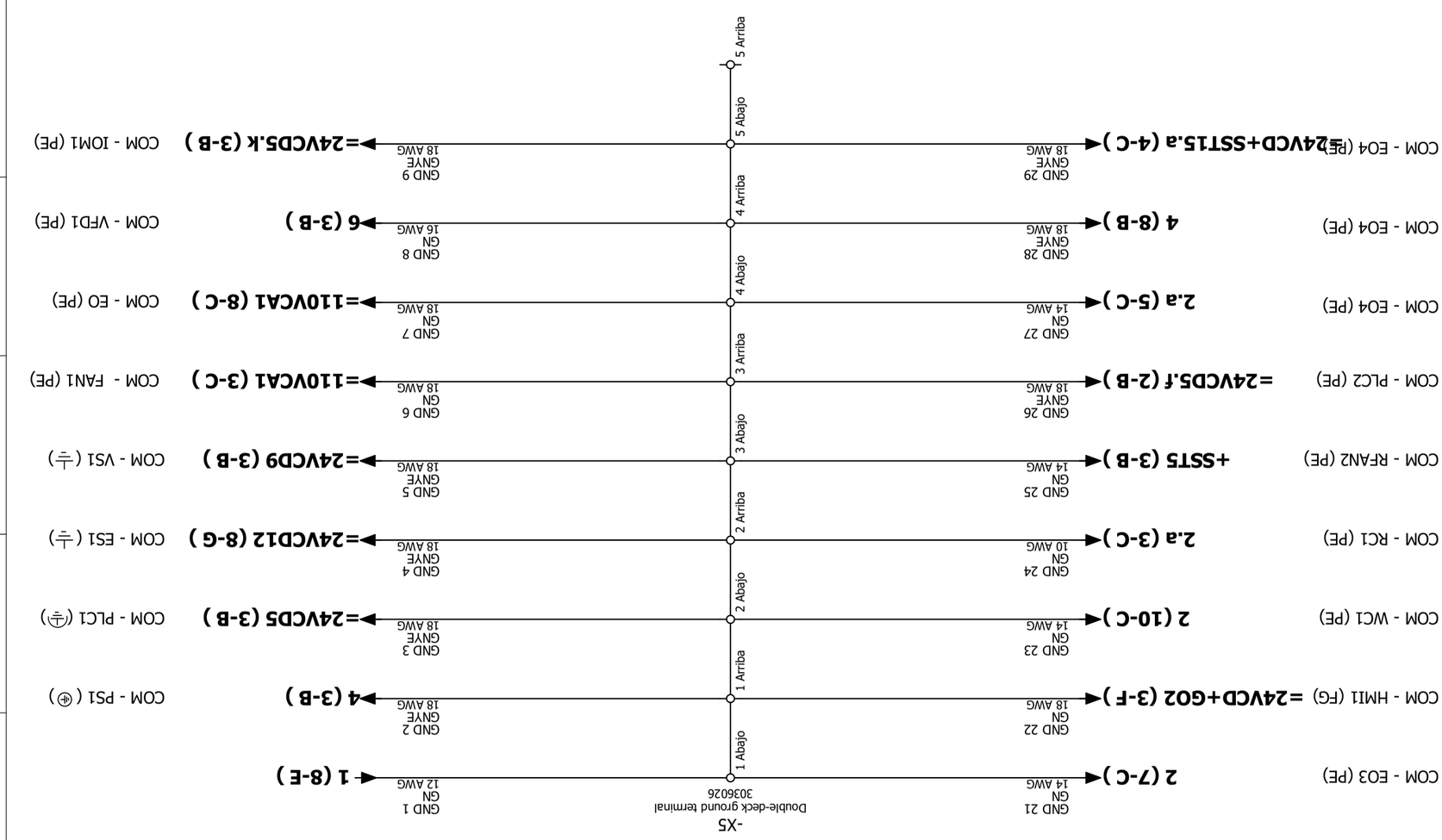

Automatyco®	O.P. 978	Created	05/01/2026
Automatización, Mantenimiento y Construcción Condominio Industrial Siglo 21, Av. Siglo 21 #50 int. # 115, Valle de Santa Cruz, CP 45640 Tlajomulco de Zúñiga, Jal, Mex.	Client: Pegatron	Modified	30/03/2026
	PEGATRON	Revision	0
		Responsible	A.Yepez

Project's name	ATLAS CP
Station name	ST 30
Page name	Terminal connections
Facility	220VCA
Mounting location	GC
Sheet	3.a
Page	31 / 123

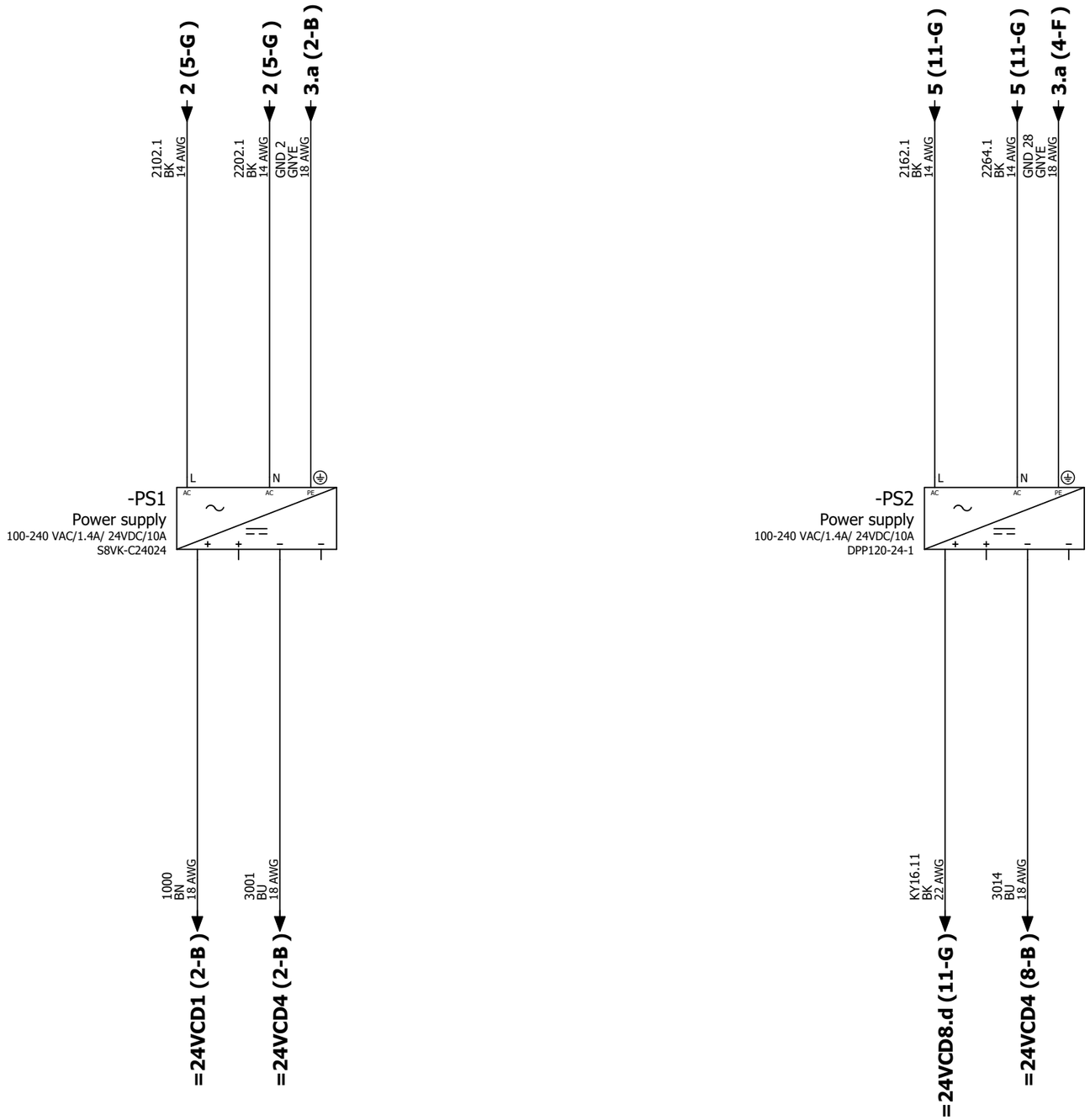

Automatyco®	Automatización, Mantenimiento y Construcción Condominio Industrial Siglo 21, Av. Siglo 21 #50 int #115, Valle de Santa Cruz, CP 45640 Tlajomulco de Zuñiga, Jal, Mex.	O.P. 978	Created 05/01/2026	Project's name	Page name	Facility 220VCA
		Client: Pegatron	Modified 31/03/2026	ATLAS CP	Power supply connections	Mounting location GC
		PEGATRON	Revision 0	Station name		Sheet 4
			Responsible A.Yepez	ST 30		Page 32 / 123

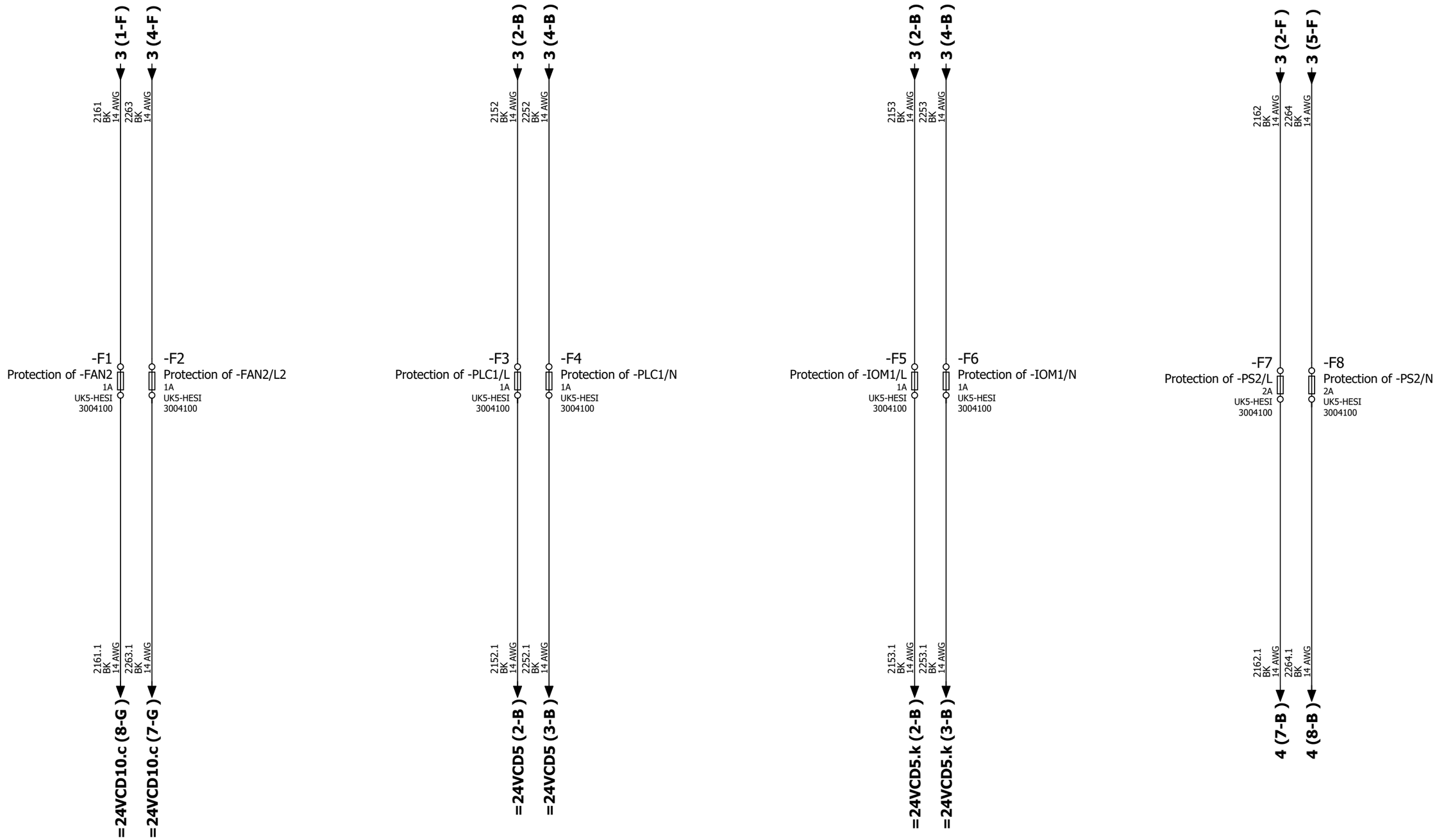
3 (1-F)
3 (4-F)
2161
BK
14 AWG
2263
BK
14 AWG
-F1
Protection of -FAN2
1A
UK5-HESI
3004100
-F2
Protection of -FAN2/L2
1A
UK5-HESI
3004100
2161.1
BK
14 AWG
2263.1
BK
14 AWG
=24VCD10.c (8-G)
=24VCD10.c (7-G)
3 (2-B)
3 (4-B)
2152
BK
14 AWG
2252
BK
14 AWG
-F3
Protection of -PLC1/L
1A
UK5-HESI
3004100
-F4
Protection of -PLC1/N
1A
UK5-HESI
3004100
2152.1
BK
14 AWG
2252.1
BK
14 AWG
=24VCD5 (2-B)
=24VCD5 (3-B)
3 (2-B)
3 (4-B)
2153
BK
14 AWG
2253
BK
14 AWG
-F5
Protection of -IOM1/L
1A
UK5-HESI
3004100
-F6
Protection of -IOM1/N
1A
UK5-HESI
3004100
2153.1
BK
14 AWG
2253.1
BK
14 AWG
=24VCD5.k (2-B)
=24VCD5.k (3-B)
3 (2-F)
3 (5-F)
2162
BK
14 AWG
2264
BK
14 AWG
-F7
Protection of -PS2/L
2A
UK5-HESI
3004100
-F8
Protection of -PS2/N
2A
UK5-HESI
3004100
2162.1
BK
14 AWG
2264.1
BK
14 AWG
4 (7-B)
4 (8-B)

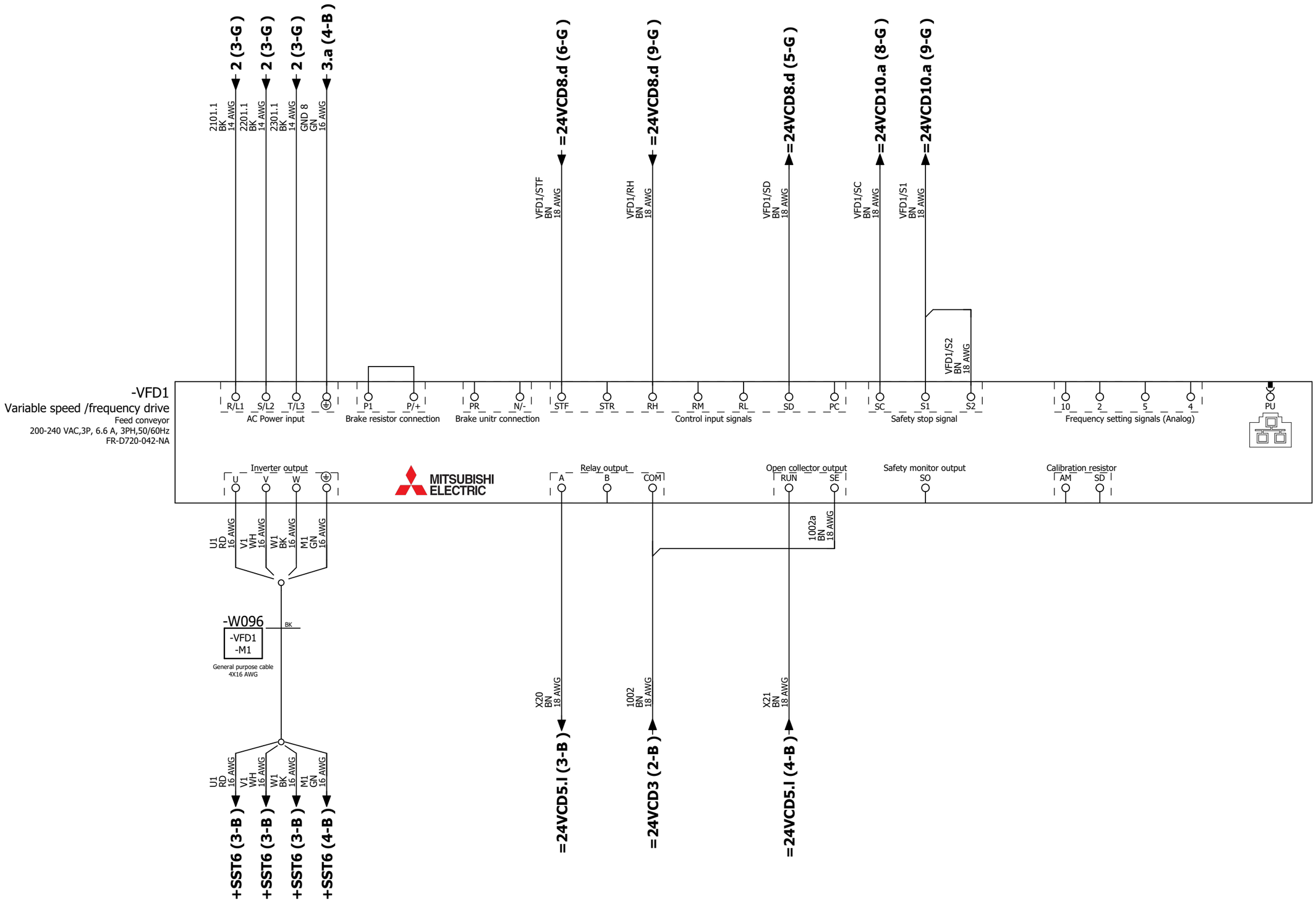

Automatyco®	Automatización, Mantenimiento y Construcción Condominio Industrial Siglo 21, Av. Siglo 21 #50 int #115, Valle de Santa Cruz, CP 45640 Tlajomulco de Zuñiga, Jal, Mex.	O.P. 978	Created 06/01/2026	Project's name	Page name	Facility 220VCA	
		Client: Pegatron	Modified 01/06/2026	ATLAS CP	VFD1 connections	Mounting location GC	
		PEGATRON	Revision 0	Station name		Sheet 6	
			Responsible A.Yepez	ST 30		Page 34 / 123	

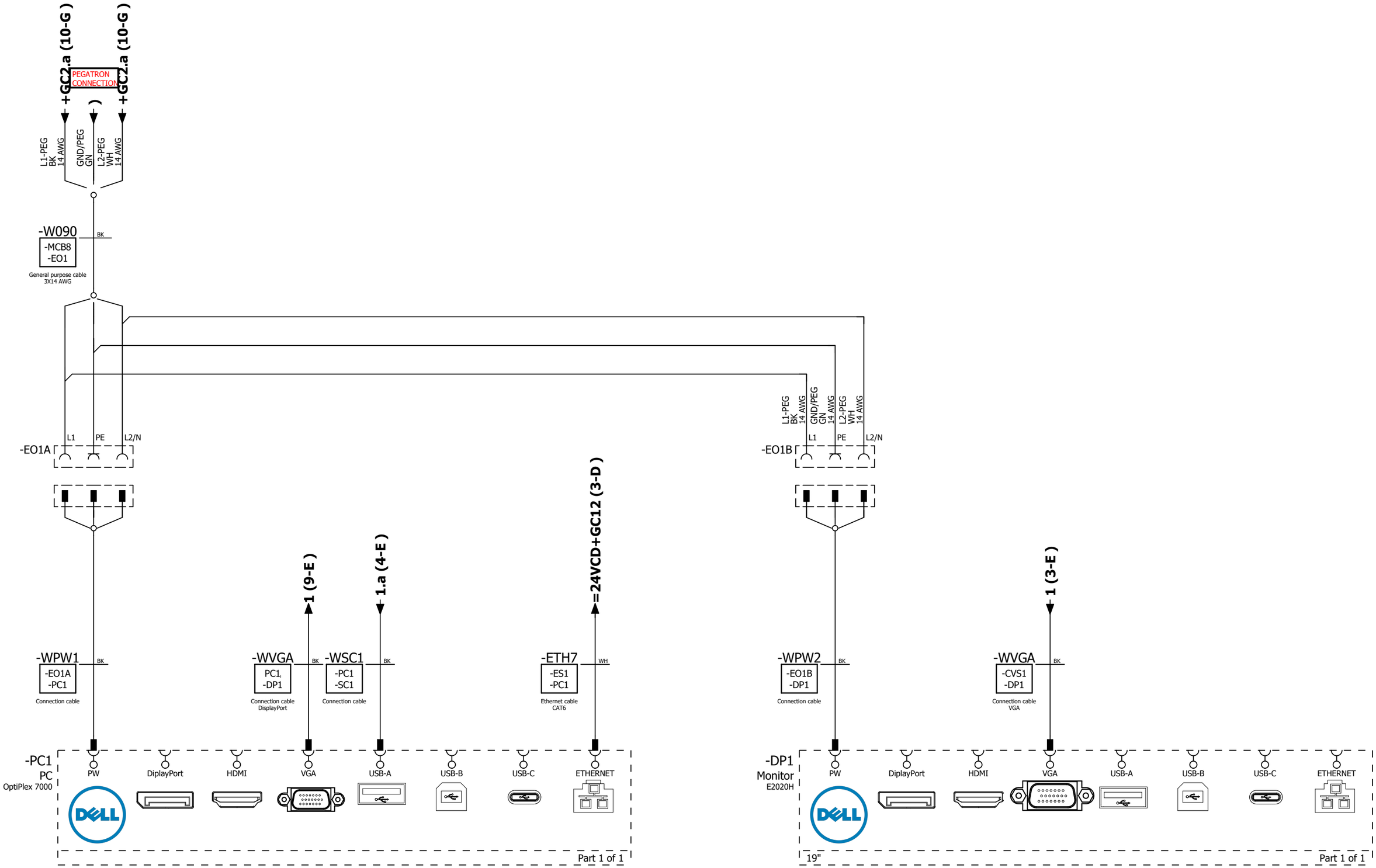

Automatyco®	Automatización, Mantenimiento y Construcción Condominio Industrial Siglo 21, Av. Siglo 21 #50 int #115, Valle de Santa Cruz, CP 45640 Tlajomulco de Zuñiga, Jal, Mex.	O.P. 978	Created	05/01/2026	Project's name	Page name	Facility 220VCA
		Client: Pegatron	Modified	31/03/2026	ATLAS CP	CPU and monitor connections	Mounting location SST
		PEGATRON	Revision	0	Station name		Sheet 1
			Responsible	A.Yepez	ST 30		Page 35 / 123

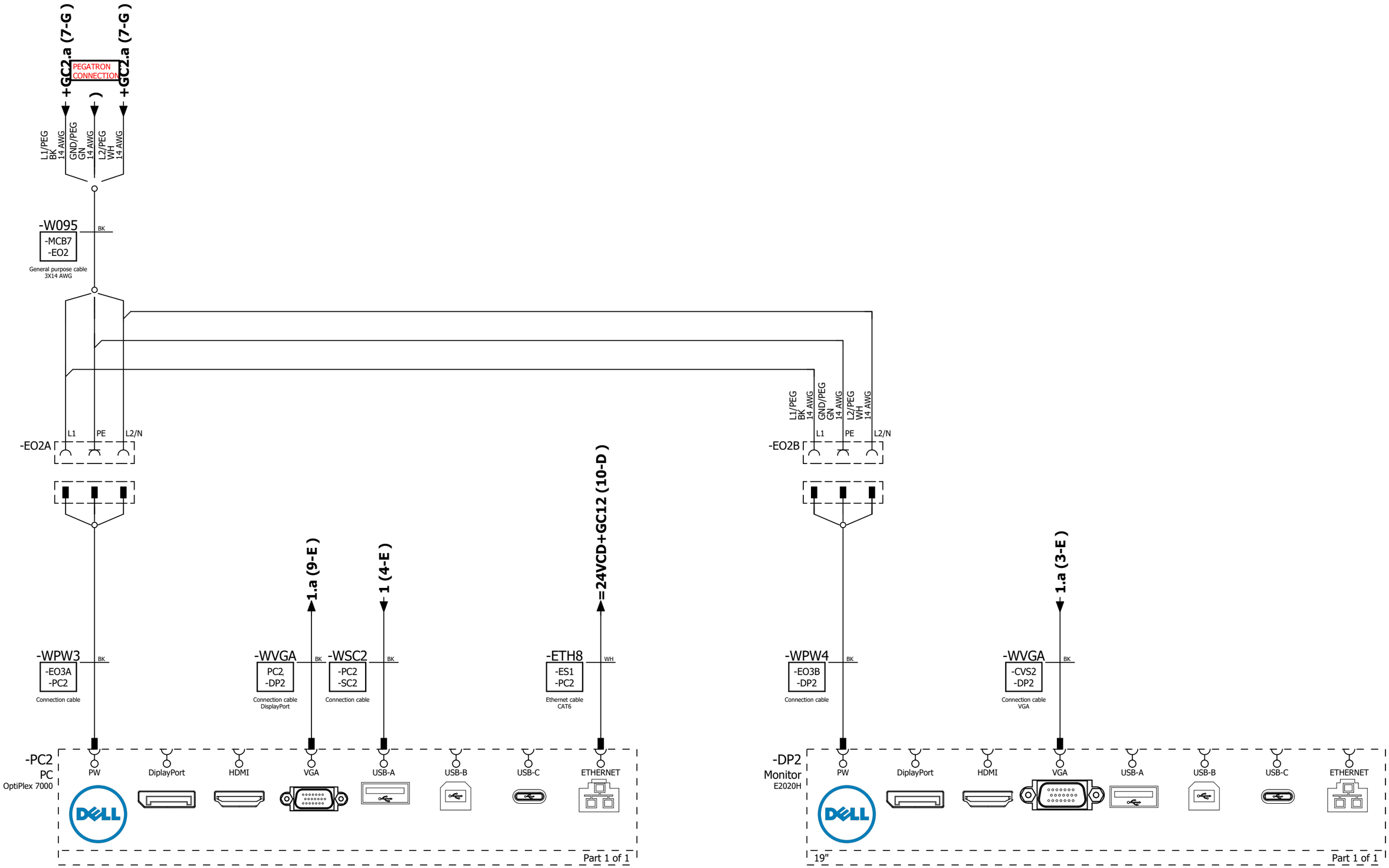

Automatyco®	Automatización, Mantenimiento y Construcción Condominio Industrial Siglo 21, Av. Siglo 21 #50 int #115, Valle de Santa Cruz, CP 45640 Tlajomulco de Zuñiga, Jal, Mex.	O.P. 978	Created	05/01/2026	Project's name	Page name	Facility 220VCA
		Client: Pegatron	Modified	31/03/2026	ATLAS CP	CPU and monitor connections	Mounting location SST
		PEGATRON	Revision	0	Station name		Sheet 1.a
			Responsible	A.Yepez	ST 30		Page 36 / 123

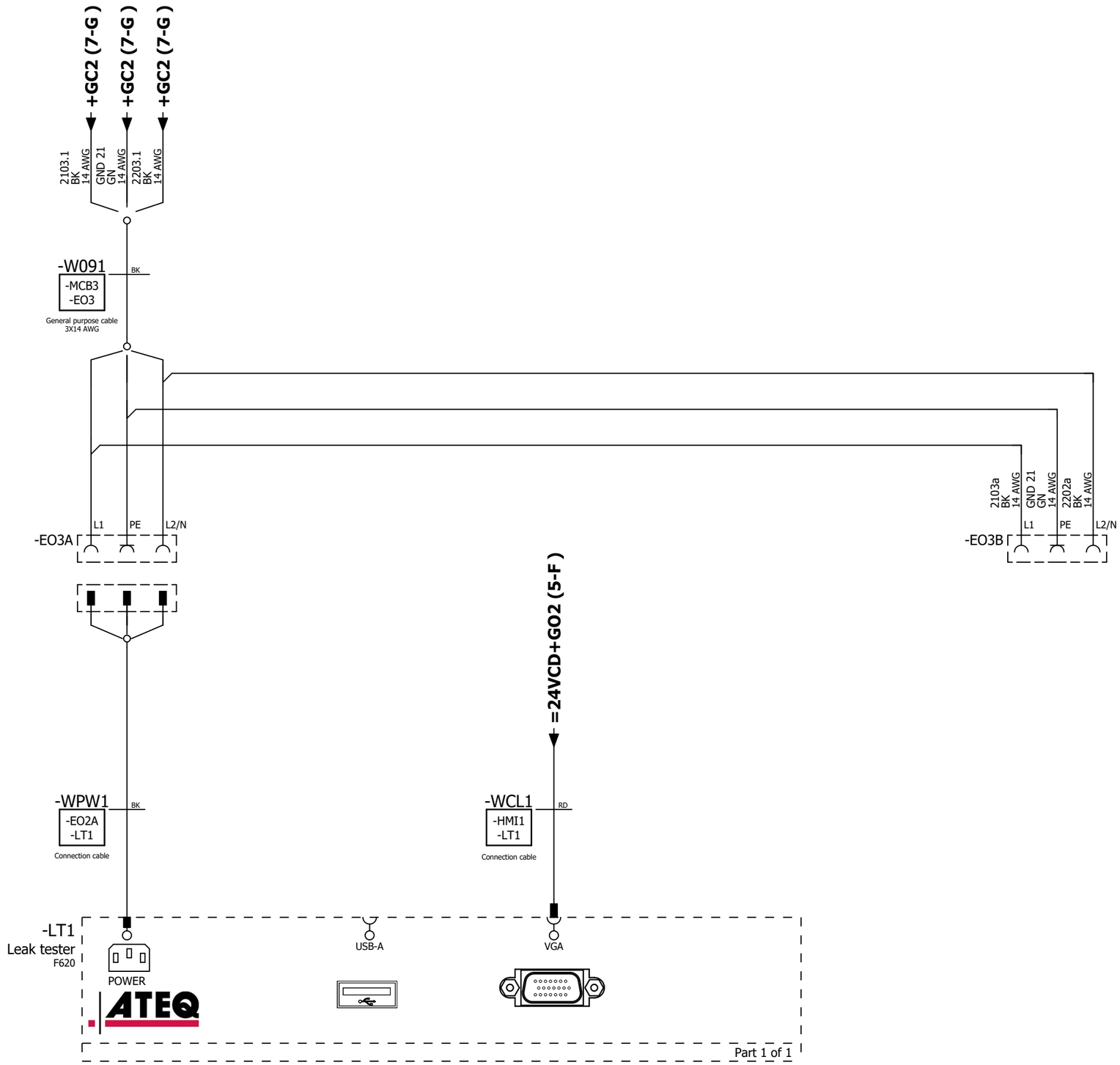
+GC2 (7-G)
+GC2 (7-G)
+GC2 (7-G)
2103.1
BK
14 AWG
GND 21
GN
14 AWG
2203.1
BK
14 AWG
-W091
BK
-MCB3
-EO3
General purpose cable
3X14 AWG
-EO3A
L1
PE
L2/N
2103a
BK
14 AWG
GND 21
GN
14 AWG
2202a
BK
14 AWG
-EO3B
L1
PE
L2/N
=24VCD+GO2 (5-F)
-WPW1
BK
-EO2A
-LT1
Connection cable
-WCL1
RD
-HMI1
-LT1
Connection cable
-LT1
Leak tester
F620
POWER
USB-A
VGA
ATEQ
Part 1 of 1

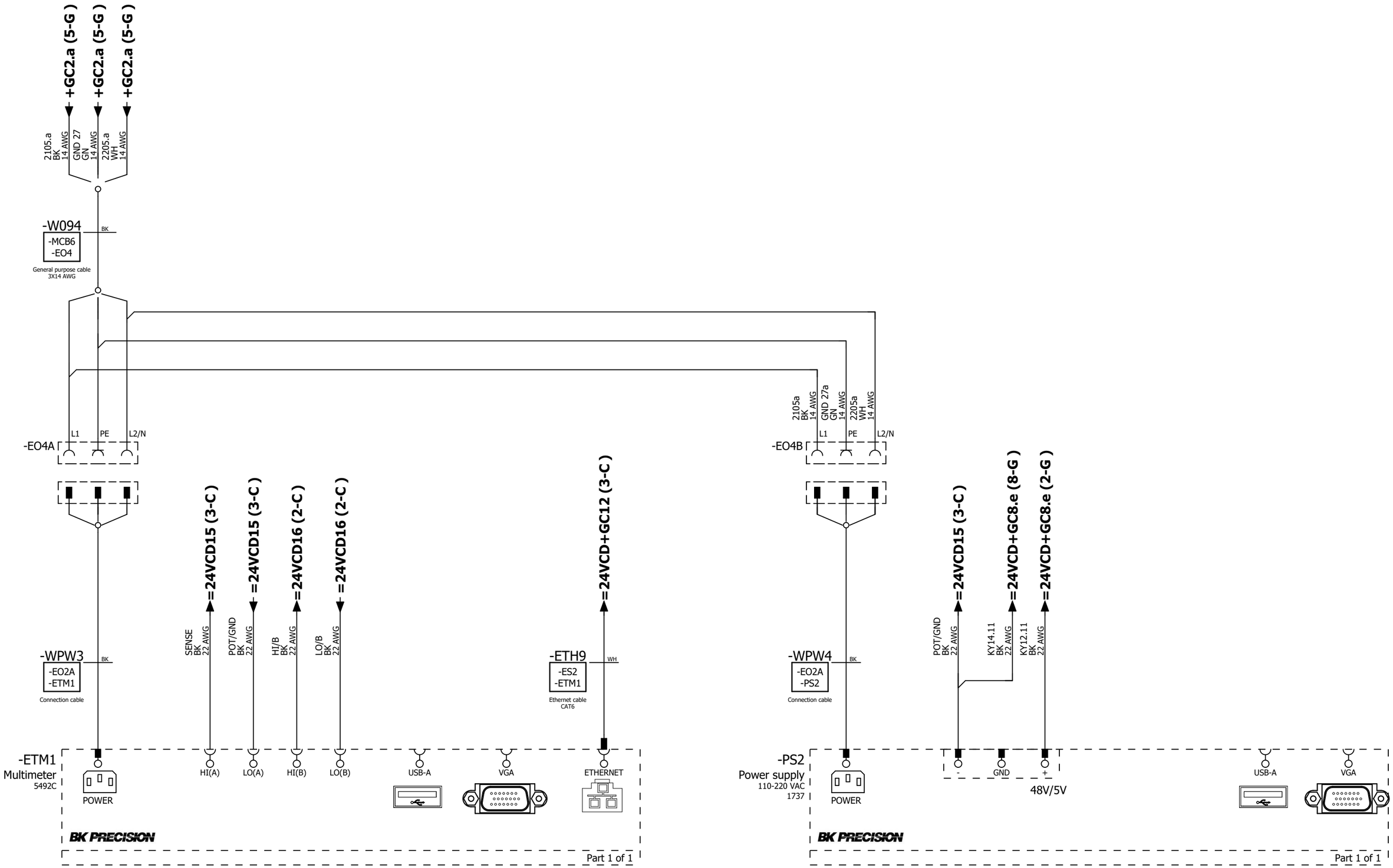

Automatyco®	Automatización, Mantenimiento y Construcción Condominio Industrial Siglo 21, Av. Siglo 21 #50 int #115, Valle de Santa Cruz, CP 45640 Tlajomulco de Zuñiga, Jal, Mex.	O.P. 978	Created	07/01/2026	Project's name	Page name	Facility 220VCA
		Client: Pegatron	Modified	01/06/2026	ATLAS CP	220 Outlet connections	Mounting location SST
		PEGATRON	Revision	0	Station name		Sheet 2.a
			Responsible	A.Yepez	ST 30		Page 38 / 123

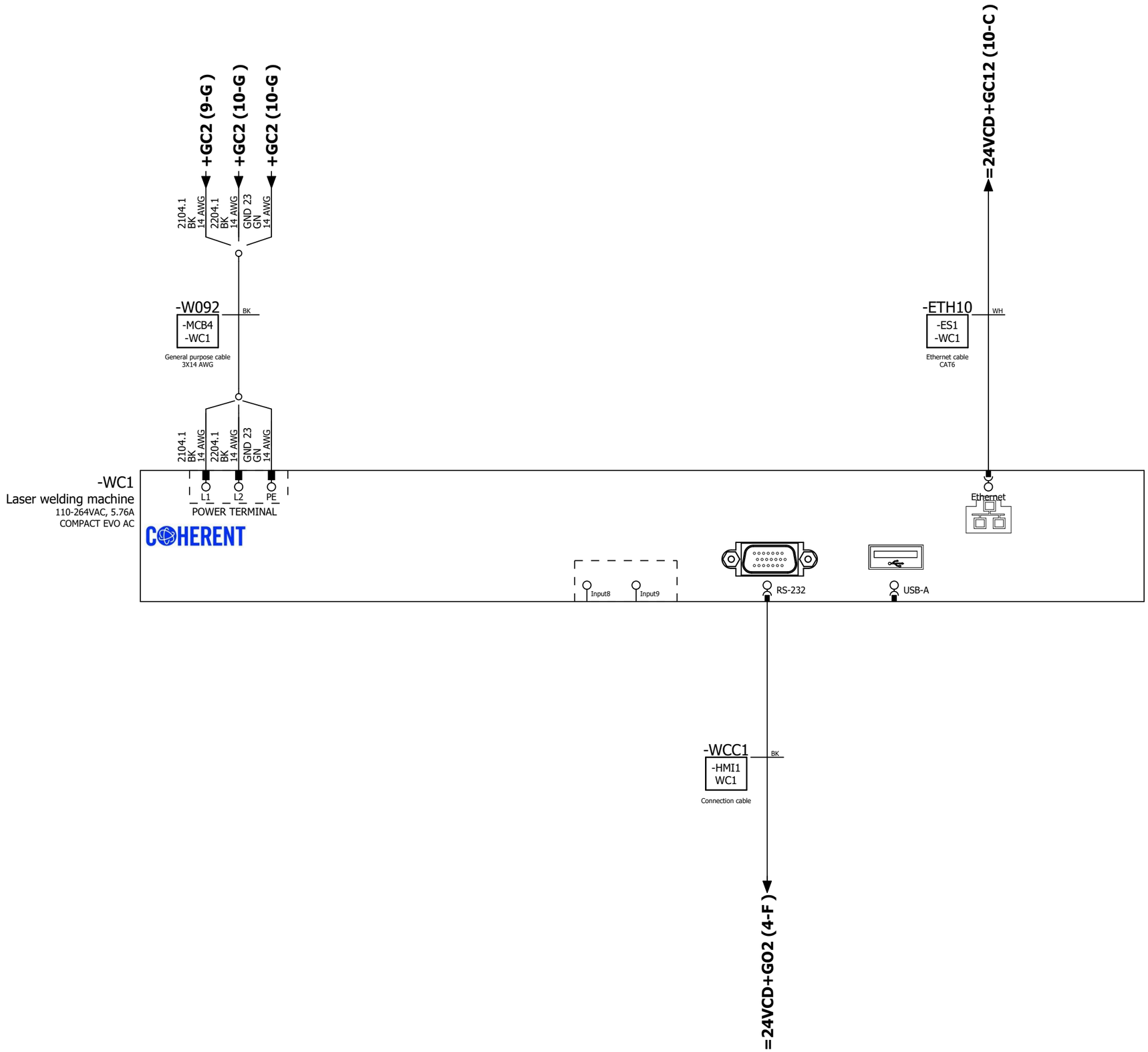

Automatyco®	Automatización, Mantenimiento y Construcción Condominio Industrial Siglo 21, Av. Siglo 21 #50 int #115, Valle de Santa Cruz, CP 45640 Tlajomulco de Zuñiga, Jal, Mex.	O.P. 978	Created	05/01/2026	Project's name	Page name	Facility 220VCA
		Client: Pegatron PEGATRON	Modified	01/06/2026	ATLAS CP	Welder controller connections	Mounting location SST
			Revision	0	Station name		Sheet 3
			Responsible	A.Yepez	ST 30		Page 39 / 123

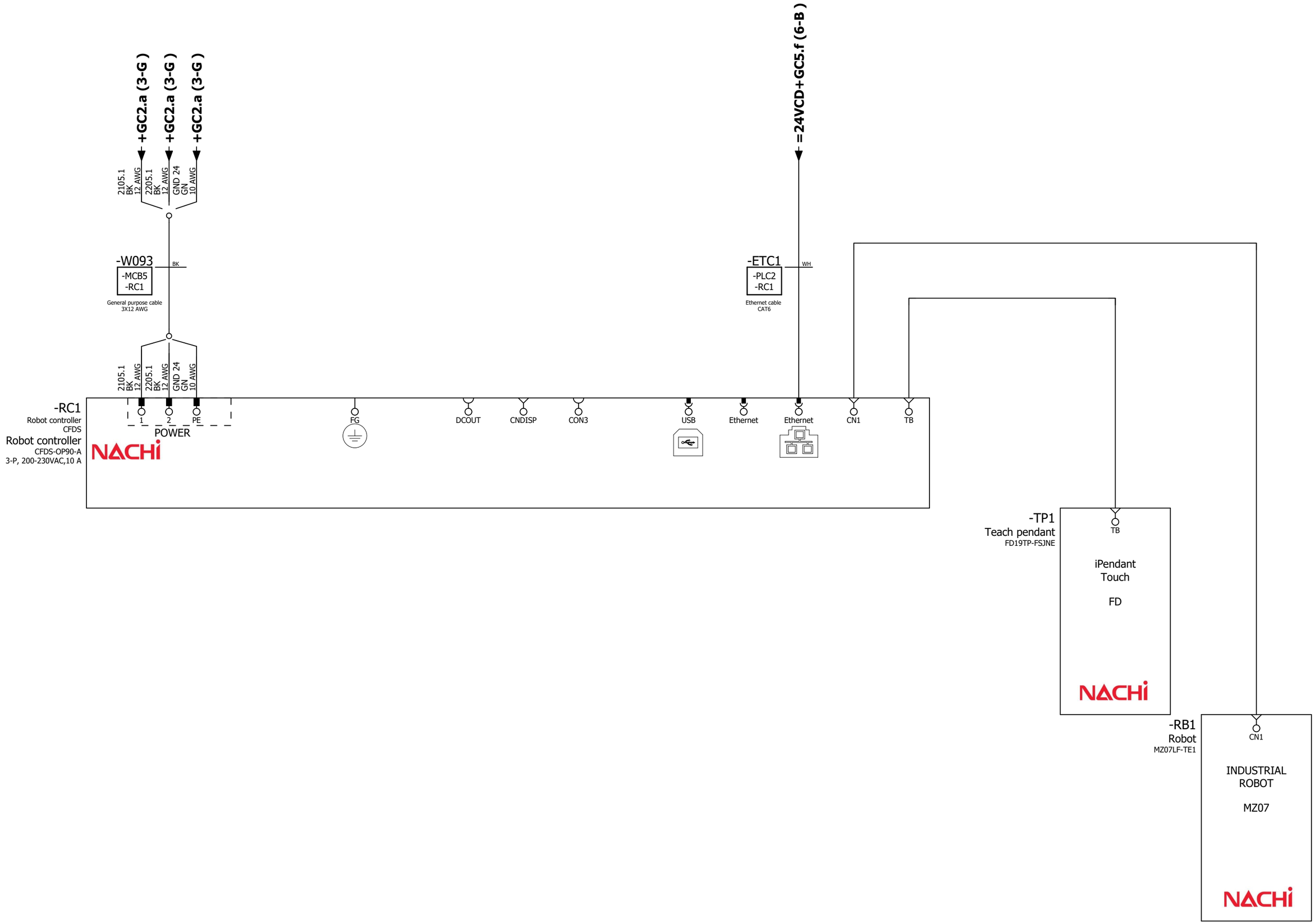

Automatyco®	Automatización, Mantenimiento y Construcción Condominio Industrial Siglo 21, Av. Siglo 21 #50 int #115, Valle de Santa Cruz, CP 45640 Tlajomulco de Zuñiga, Jal, Mex.	O.P. 978	Created	05/01/2026	Project's name	Page name	Facility 220VCA
		Client: Pegatron PEGATRON	Modified	01/06/2026	ATLAS CP	Robot controller connections	Mounting location SST
			Revision	0	Station name		Sheet 4
			Responsible	A.Yepez	ST 30		Page 40 / 123

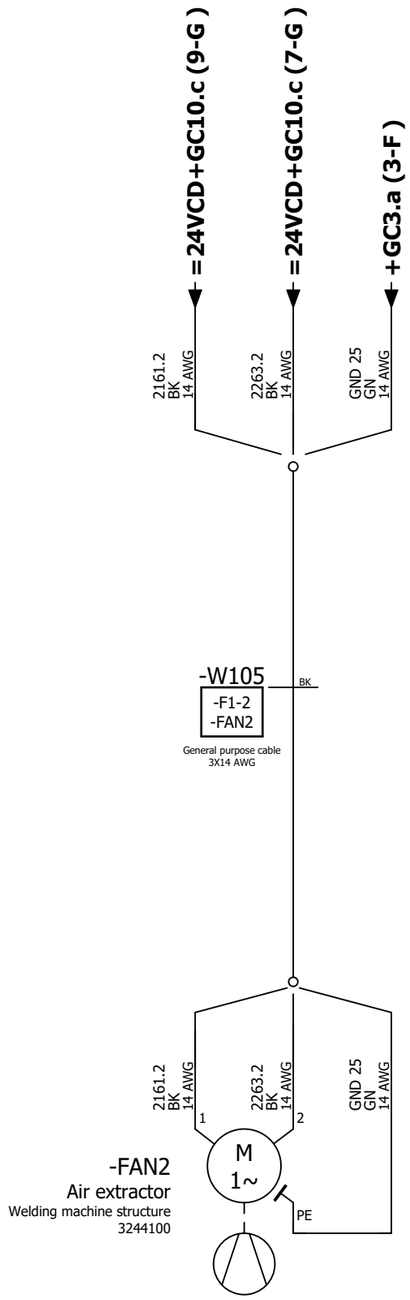

Automatyco®	Automatización, Mantenimiento y Construcción Condominio Industrial Siglo 21, Av. Siglo 21 #50 int #115, Valle de Santa Cruz, CP 45640 Tlajomulco de Zuñiga, Jal, Mex.	O.P. 978	Created	05/01/2026	Project's name	Page name	Facility 220VCA
		Client: Pegatron	Modified	31/03/2026	ATLAS CP	Air extractor connections	Mounting location SST
		PEGATRON	Revision	0	Station name		Sheet 5
			Responsible	A.Yepez	ST 30		Page 41 / 123

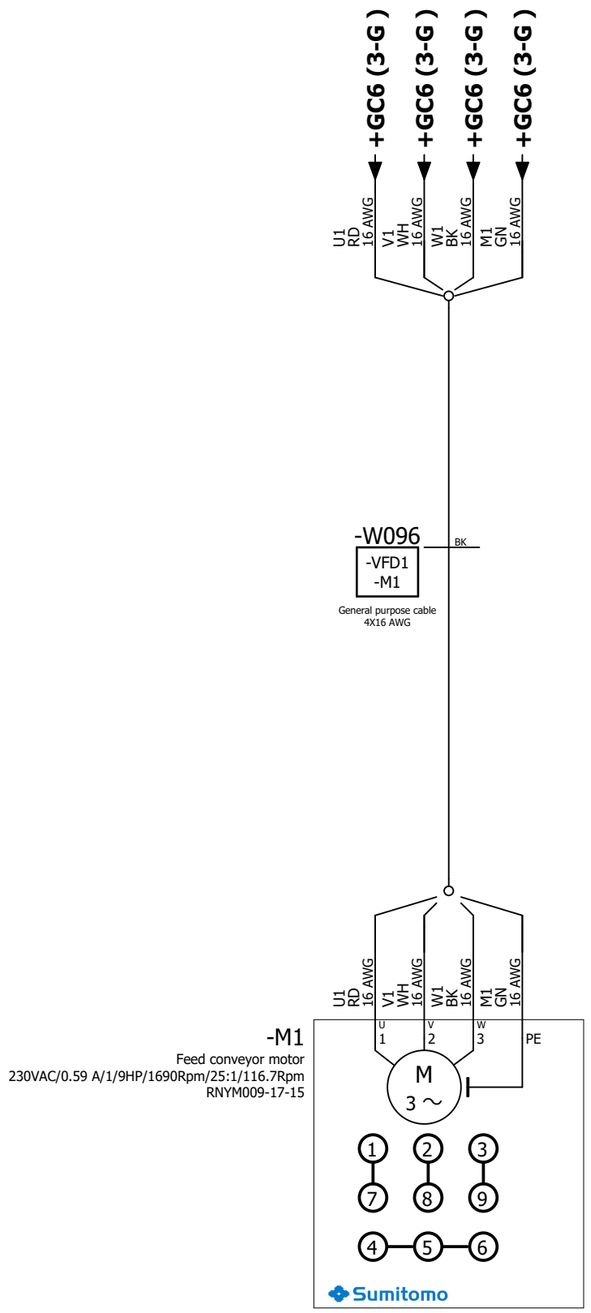

Automatyco®	Automatización, Mantenimiento y Construcción Condominio Industrial Siglo 21, Av. Siglo 21 #50 int #115, Valle de Santa Cruz, CP 45640 Tlajomulco de Zuñiga, Jal, Mex.	O.P. 978	Created	06/01/2026	Project's name	Page name	Facility 220VCA
		Client: Pegatron	Modified	06/01/2026	ATLAS CP	Motor connections	Mounting location SST
		PEGATRON	Revision	0	Station name		Sheet 6
			Responsible	A.Yepez	ST 30		Page 42 / 123

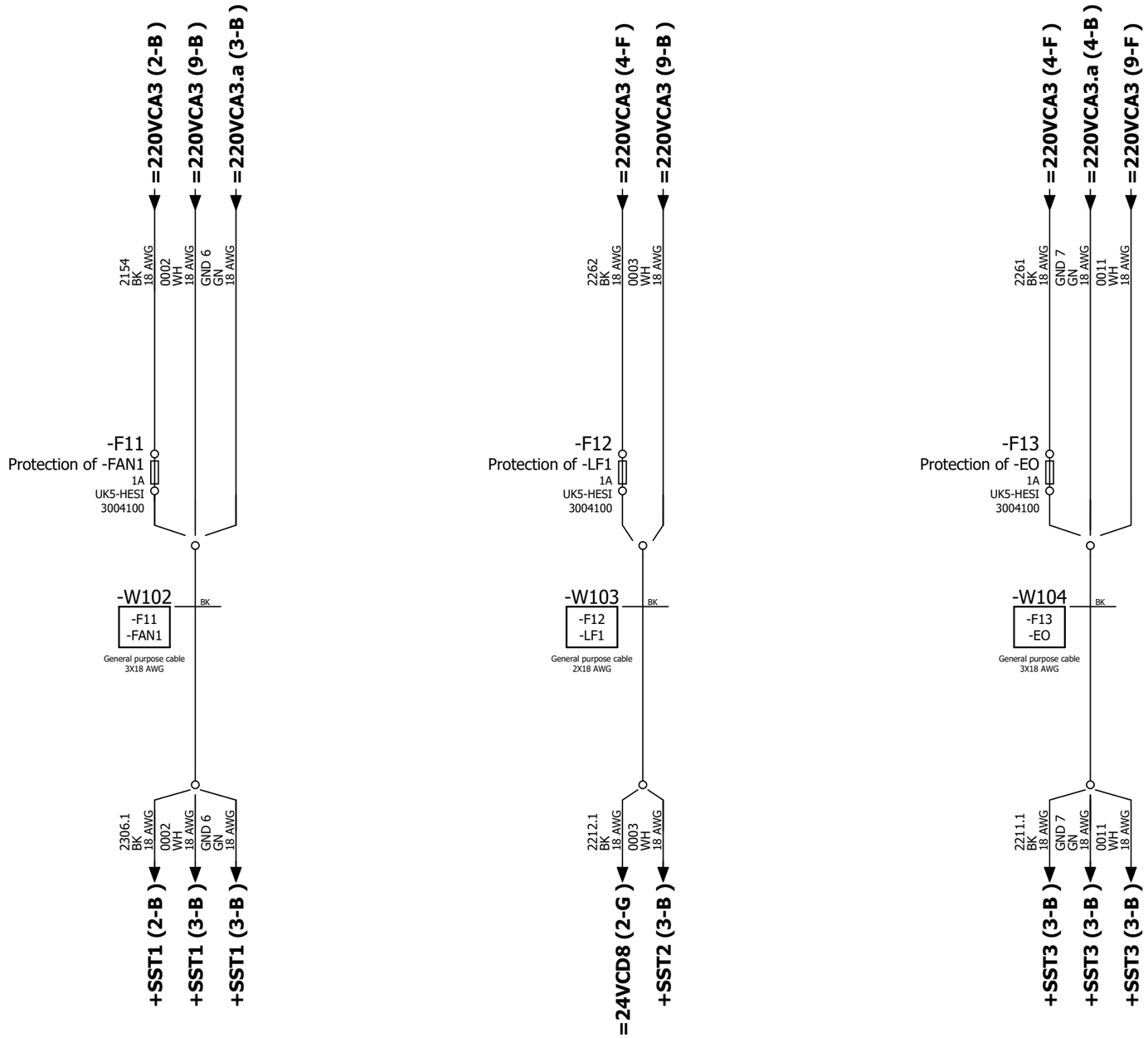

Automatyco®	Automatización, Mantenimiento y Construcción Condominio Industrial Siglo 21, Av. Siglo 21 #50 int #115, Valle de Santa Cruz, CP 45640 Tlajomulco de Zuñiga, Jal, Mex.	O.P. 978	Created	05/01/2026	Project's name	Page name	Facility 110VCA
		Client: Pegatron	Modified	31/03/2026	ATLAS CP	110 VAC Fuses connections	Mounting location GC
		PEGATRON	Revision	0	Station name		Sheet 1
			Responsible	A.Yepez	ST 30		Page 43 / 123

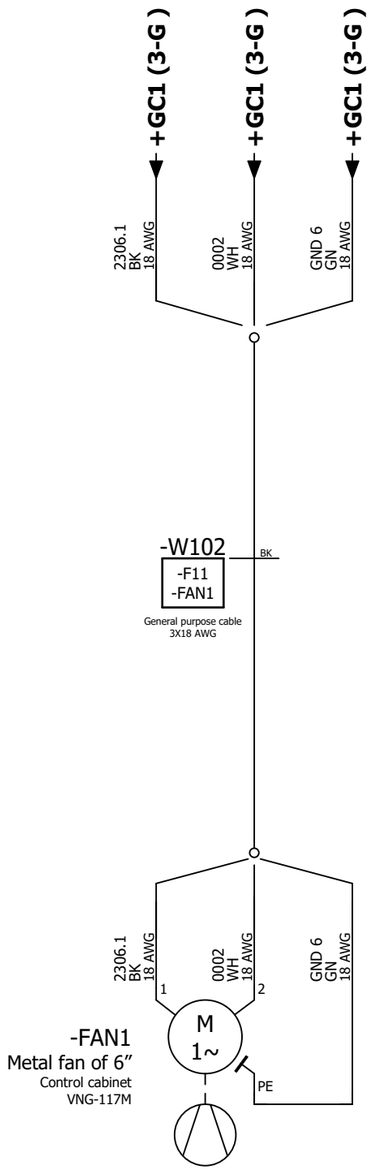

Automatyco®	Automatización, Mantenimiento y Construcción Condominio Industrial Siglo 21, Av. Siglo 21 #50 int #115, Valle de Santa Cruz, CP 45640 Tlajomulco de Zuñiga, Jal, Mex.	O.P. 978	Created	05/01/2026	Project’s name	Page name	Facility 110VCA
		Client: Pegatron	Modified	30/03/2026	ATLAS CP	110 VAC Fan connections	Mounting location SST
		PEGATRON	Revision	0	Station name		Sheet 1
			Responsible	A.Yepez	ST 30		Page 44 / 123

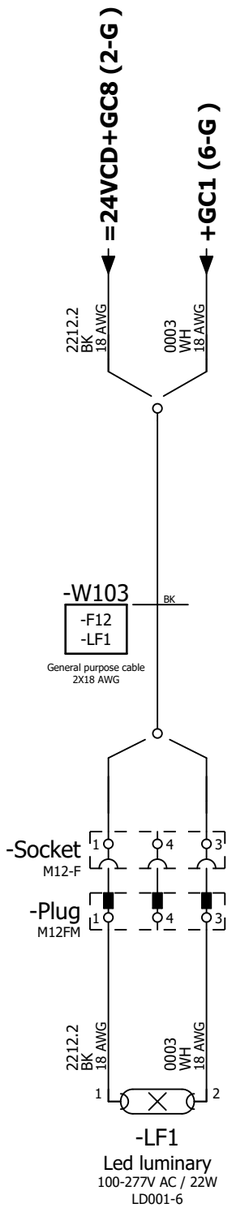
=24VCD+GC8 (2-G)
+GC1 (6-G)
2212.2
BK
18 AWG
0003
WH
18 AWG
-W103
BK
-F12
-LF1
General purpose cable
2X18 AWG
-Socket
M12-F
-Plug
M12FM
1
4
3
2212.2
BK
18 AWG
0003
WH
18 AWG
1
2
-LF1
Led luminary
100-277V AC / 22W
LD001-6

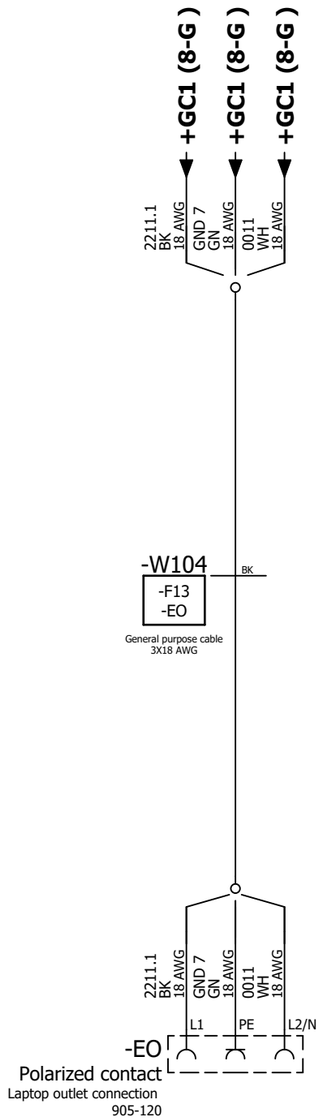

Automatyco®	Automatización, Mantenimiento y Construcción Condominio Industrial Siglo 21, Av. Siglo 21 #50 int #115, Valle de Santa Cruz, CP 45640 Tlajomulco de Zuñiga, Jal, Mex.	O.P. 978	Created	05/01/2026	Project's name	Page name	Facility 110VCA
		Client: Pegatron	Modified	07/01/2026	ATLAS CP	110 VAC Outlet connections	Mounting location SST
		PEGATRON	Revision	0	Station name		Sheet 3
			Responsible	A.Yepez	ST 30		Page 46 / 123

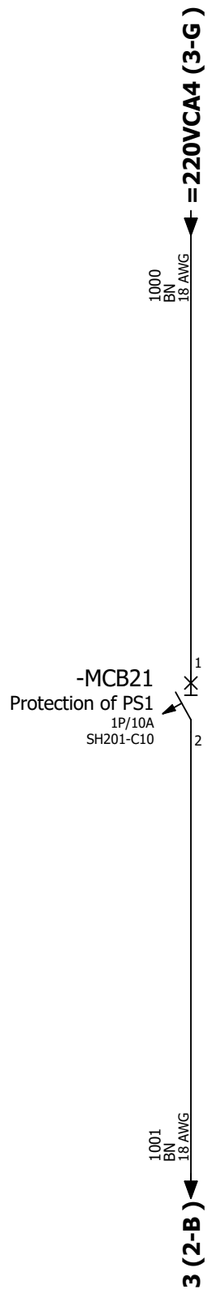
=220VCA4 (3-G)
1000
BN
18 AWG
-MCB21
Protection of PS1
1P/10A
SH201-C10
1
2
1001
BN
18 AWG
3 (2-B)

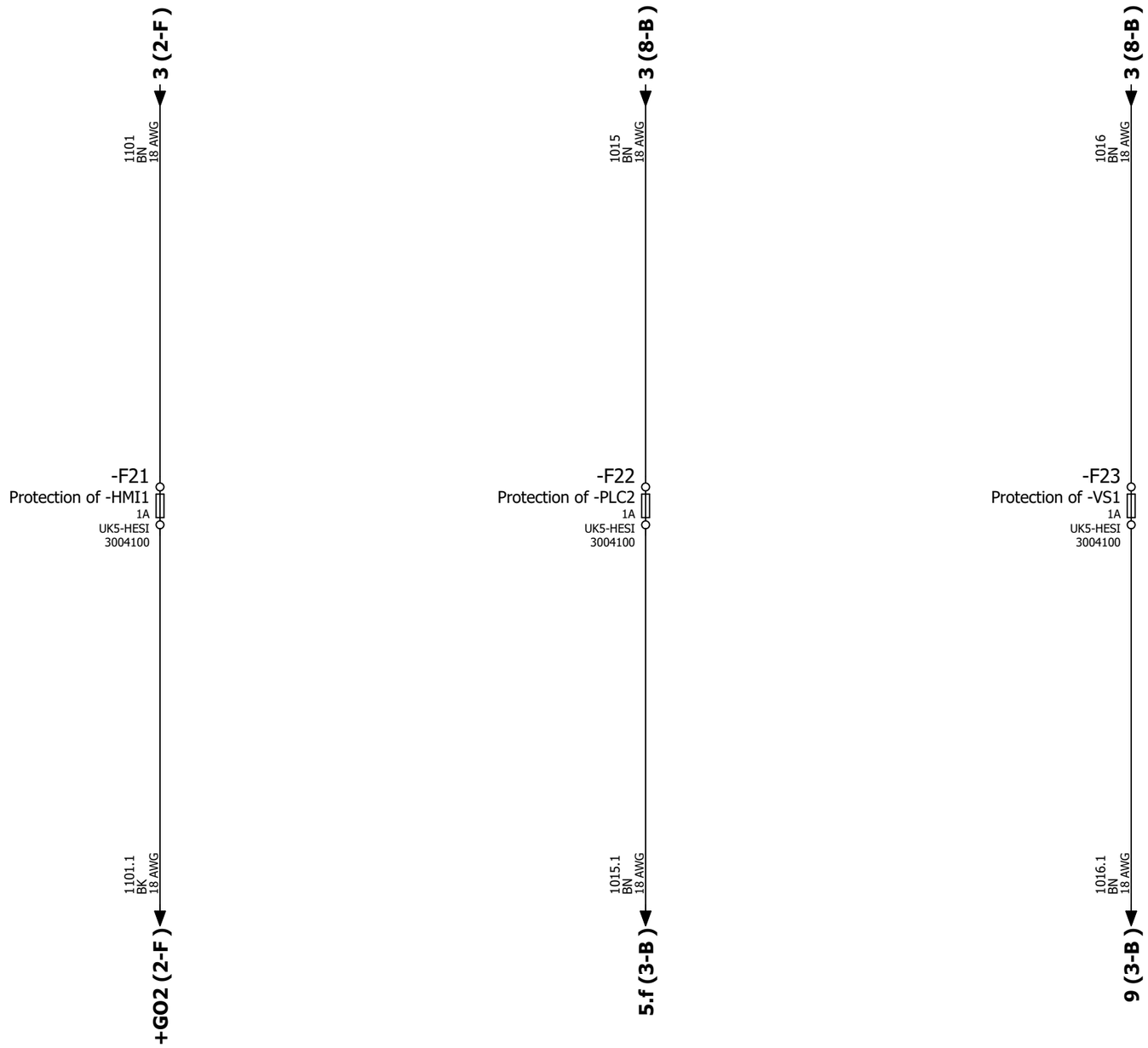
3 (2-F)
1101
BN
18 AWG
-F21
Protection of -HMI1
1A
UK5-HESI
3004100
1101.1
BK
18 AWG
+GO2 (2-F)
3 (8-B)
1015
BN
18 AWG
-F22
Protection of -PLC2
1A
UK5-HESI
3004100
1015.1
BN
18 AWG
5.f (3-B)
3 (8-B)
1016
BN
18 AWG
-F23
Protection of -VS1
1A
UK5-HESI
3004100
1016.1
BN
18 AWG
9 (3-B)

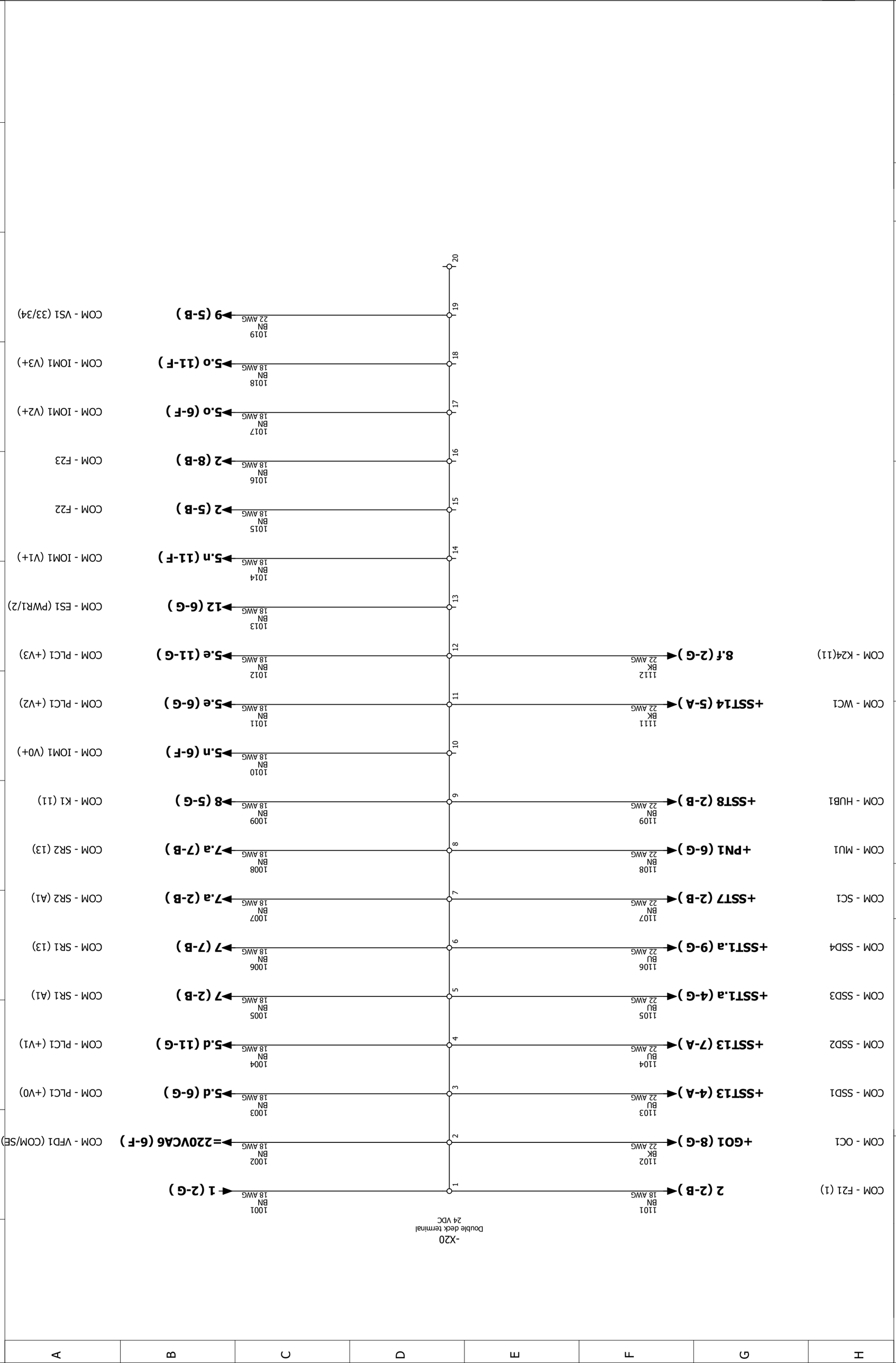

Automatyco®

Automatización, Mantenimiento y Construcción
Condominio Industrial Siglo 21,
Av. Siglo 21 #30 int. #115,
Valle de Santa Cruz, CP 45640
Tlajomulco de Zúñiga, Jal, Mex.

O.P. 978	
Client:	Pegatron

PEGATRON

Created	05/01/2026	
Modified	01/06/2026	
Revision	0	
Responsible	A.Yepez	

Page name: 24 VDC Terminals connections

Project's name: ATLAS CP
Station name: ST 30

Facility: 24VCD
Mounting location: GC
Sheet: 3
Page: 49 / 123

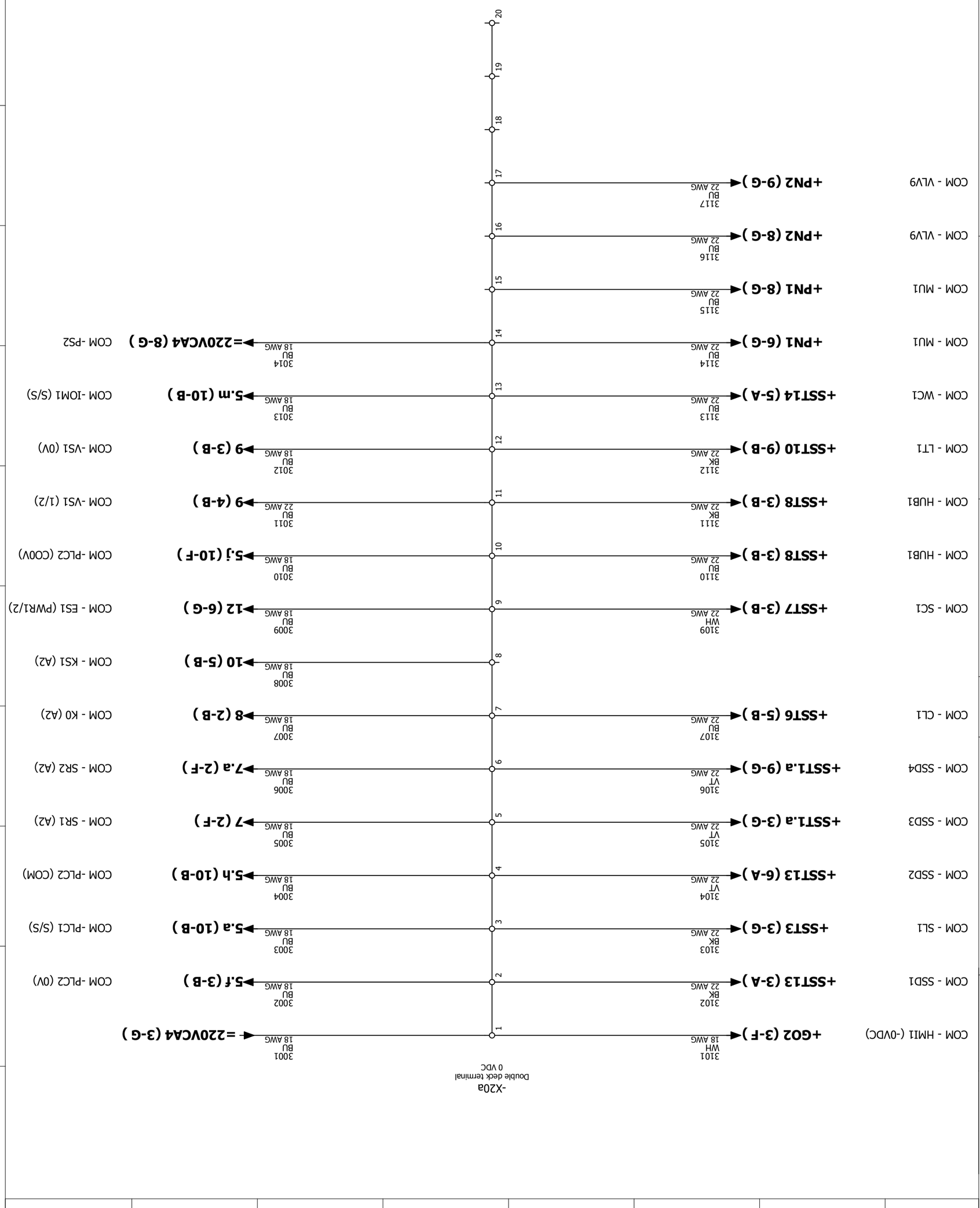

Automatyco®

Automatización, Mantenimiento y Construcción
Condominio Industrial Siglo 21,
Av. Siglo 21 #30 int. #115,
Valle de Santa Cruz, CP 45640
Tlajomulco de Zúñiga, Jal, Mex.

O.P. 978

Client:
Pegatron

PEGATRON

Created	05/01/2026
Modified	31/03/2026
Revision	0
Responsible	A.Yepez

Project's name: ATLAS CP
Station name: ST 30

Page name: 0 VDC Terminals connections

Facility: 24VCD
Mounting location: GC

Sheet: 4
Page: 50 / 123

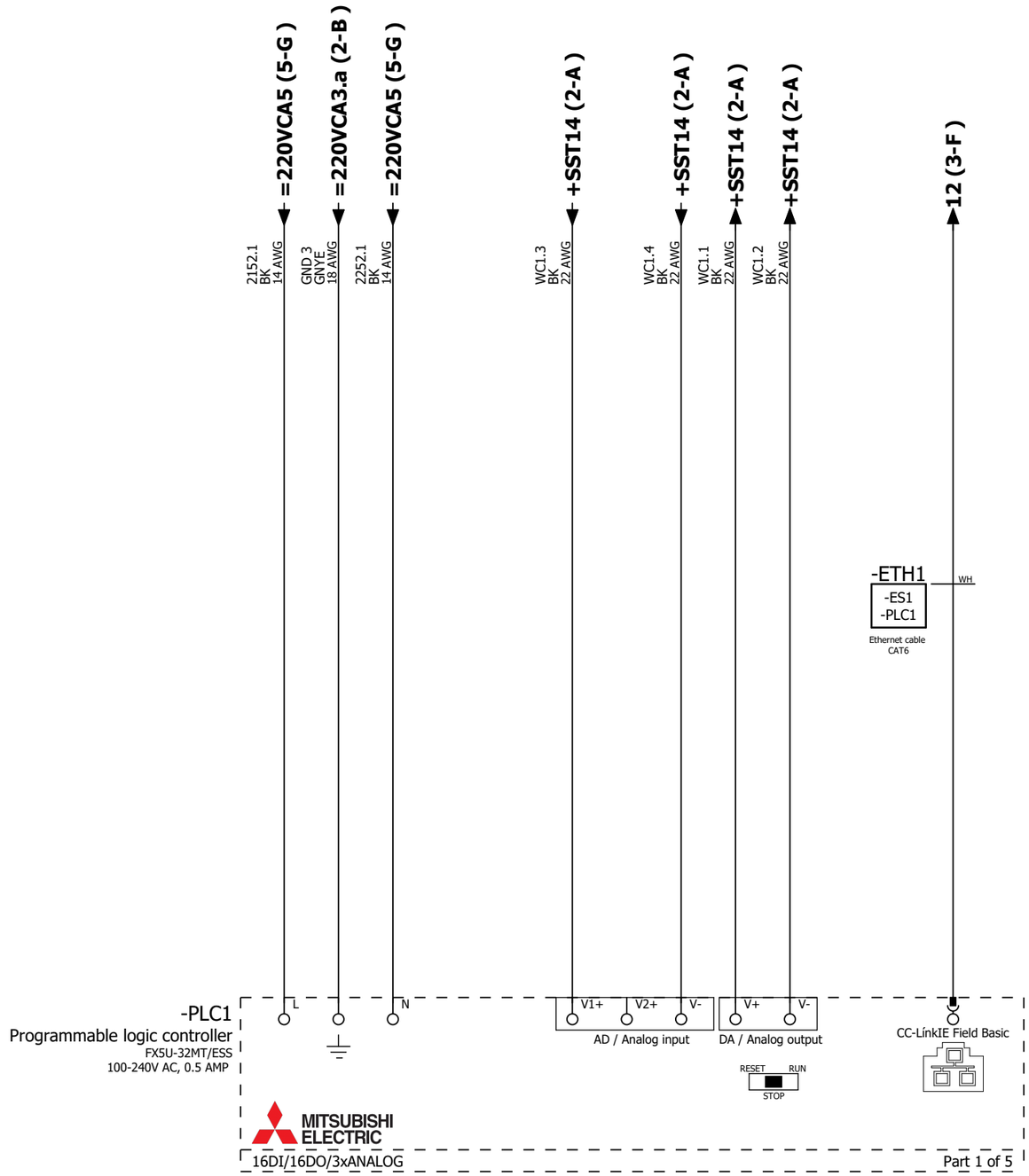

Automatyco®
Automatización,
Mantenimiento y Construcción
Condominio Industrial Siglo 21,
Av. Siglo 21 #50 int #115,
Valle de Santa Cruz, CP 45640
Tlajomulco de Zuñiga, Jal, Mex.

O.P. 978	Created	05/01/2026	Project's name	Page name	Facility 24VCD
Client: Pegatron	Modified	30/03/2026	ATLAS CP	Programmable logic controller connections	Mounting location GC
PEGATRON	Revision	0	Station name		Sheet 5
	Responsible	A.Yepez	ST 30		Page 51 / 123

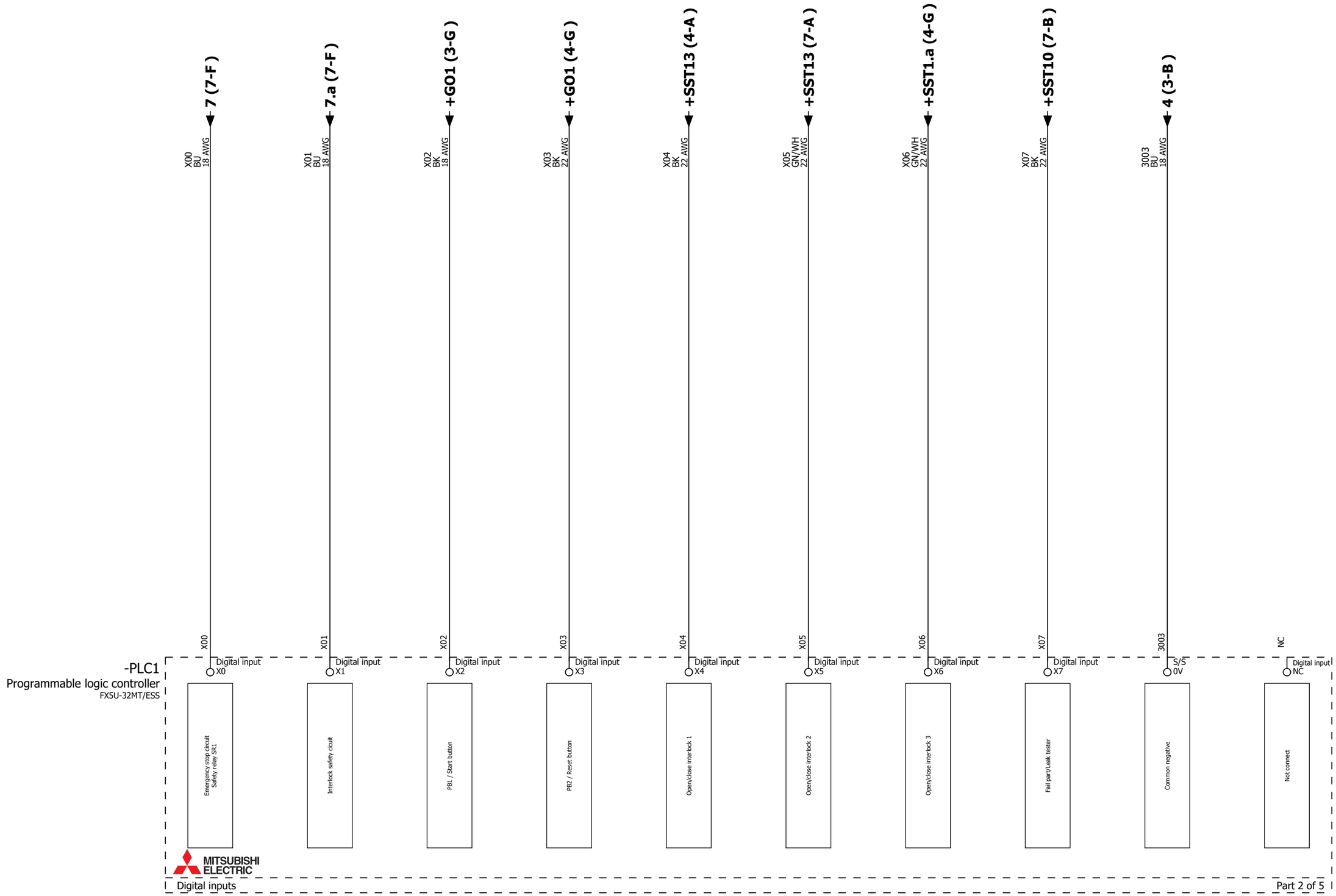
7 (7-F)
X00
BU
18 AWG
7.a (7-F)
X01
BU
18 AWG
+GO1 (3-G)
X02
BK
18 AWG
+GO1 (4-G)
X03
BK
22 AWG
+SST13 (4-A)
X04
BK
22 AWG
+SST13 (7-A)
X05
GN/WH
22 AWG
+SST1.a (4-G)
X06
GN/WH
22 AWG
+SST10 (7-B)
X07
BK
22 AWG
4 (3-B)
3003
BU
18 AWG
-PLC1
Programmable logic controller
FX5U-32MT/ESS
X00
Digital input
X0
Emergency stop circuit
Safety relay SR1
X01
Digital input
X1
Interlock safety cicuit
X02
Digital input
X2
PB1 / Start button
X03
Digital input
X3
PB2 / Reset button
X04
Digital input
X4
Open/close interlock 1
X05
Digital input
X5
Open/close interlock 2
X06
Digital input
X6
Open/close interlock 3
X07
Digital input
X7
Fail part/Leak tester
3003
S/S
0V
Common negative
NC
Digital input
NC
Not connect
MITSUBISHI
ELECTRIC
Digital inputs
Part 2 of 5

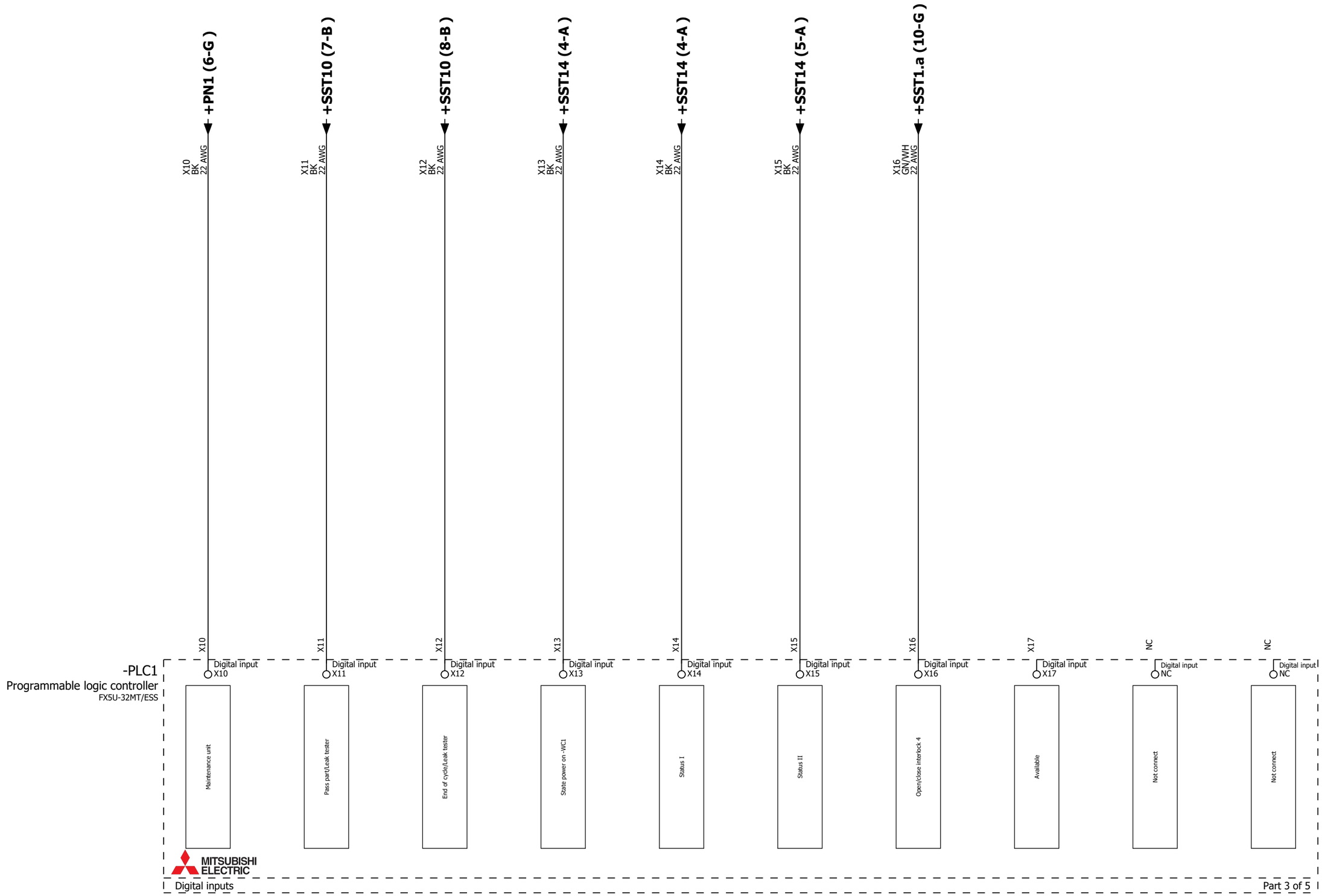
+PN1 (6-G)
+SST10 (7-B)
+SST10 (8-B)
+SST14 (4-A)
+SST14 (4-A)
+SST14 (5-A)
+SST1.a (10-G)
X10 BK 22 AWG
X11 BK 22 AWG
X12 BK 22 AWG
X13 BK 22 AWG
X14 BK 22 AWG
X15 BK 22 AWG
X16 GN/WH 22 AWG
-PLC1
Programmable logic controller
FX5U-32MT/ESS
X10 Digital input X10 Maintenance unit
X11 Digital input X11 Pass part/Leak tester
X12 Digital input X12 End of cycle/Leak tester
X13 Digital input X13 State power on -WC1
X14 Digital input X14 Status I
X15 Digital input X15 Status II
X16 Digital input X16 Open/close interlock 4
X17 Digital input X17 Available
NC Digital input NC Not connect
NC Digital input NC Not connect
MITSUBISHI ELECTRIC
Digital inputs
Part 3 of 5

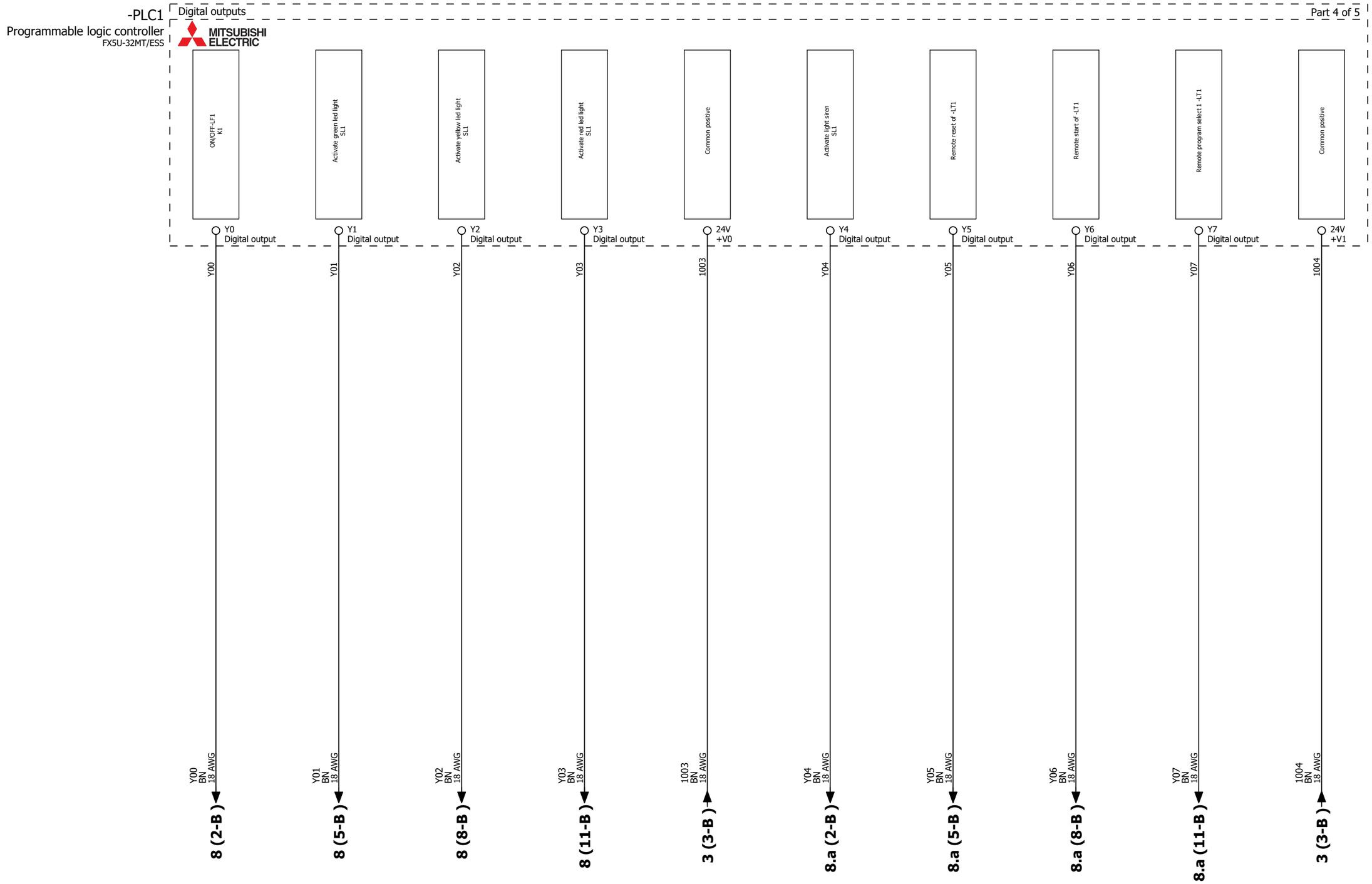
-PLC1
Programmable logic controller
FX5U-32MT/ESS
MITSUBISHI ELECTRIC
Digital outputs
Part 4 of 5
ON/OFF-LF1 K1
Activate green led light SL1
Activate yellow led light SL1
Activate red led light SL1
Common positive
Activate light siren SL1
Remote reset of -LT1
Remote start of -LT1
Remote program select 1 -LT1
Common positive
Y0 Digital output
Y1 Digital output
Y2 Digital output
Y3 Digital output
24V +V0
Y4 Digital output
Y5 Digital output
Y6 Digital output
Y7 Digital output
24V +V1
Y00
Y01
Y02
Y03
1003
Y04
Y05
Y06
Y07
1004
Y00 BN 18 AWG
Y01 BN 18 AWG
Y02 BN 18 AWG
Y03 BN 18 AWG
1003 BN 18 AWG
Y04 BN 18 AWG
Y05 BN 18 AWG
Y06 BN 18 AWG
Y07 BN 18 AWG
1004 BN 18 AWG
8 (2-B)
8 (5-B)
8 (8-B)
8 (11-B)
3 (3-B)
8.a (2-B)
8.a (5-B)
8.a (8-B)
8.a (11-B)
3 (3-B)

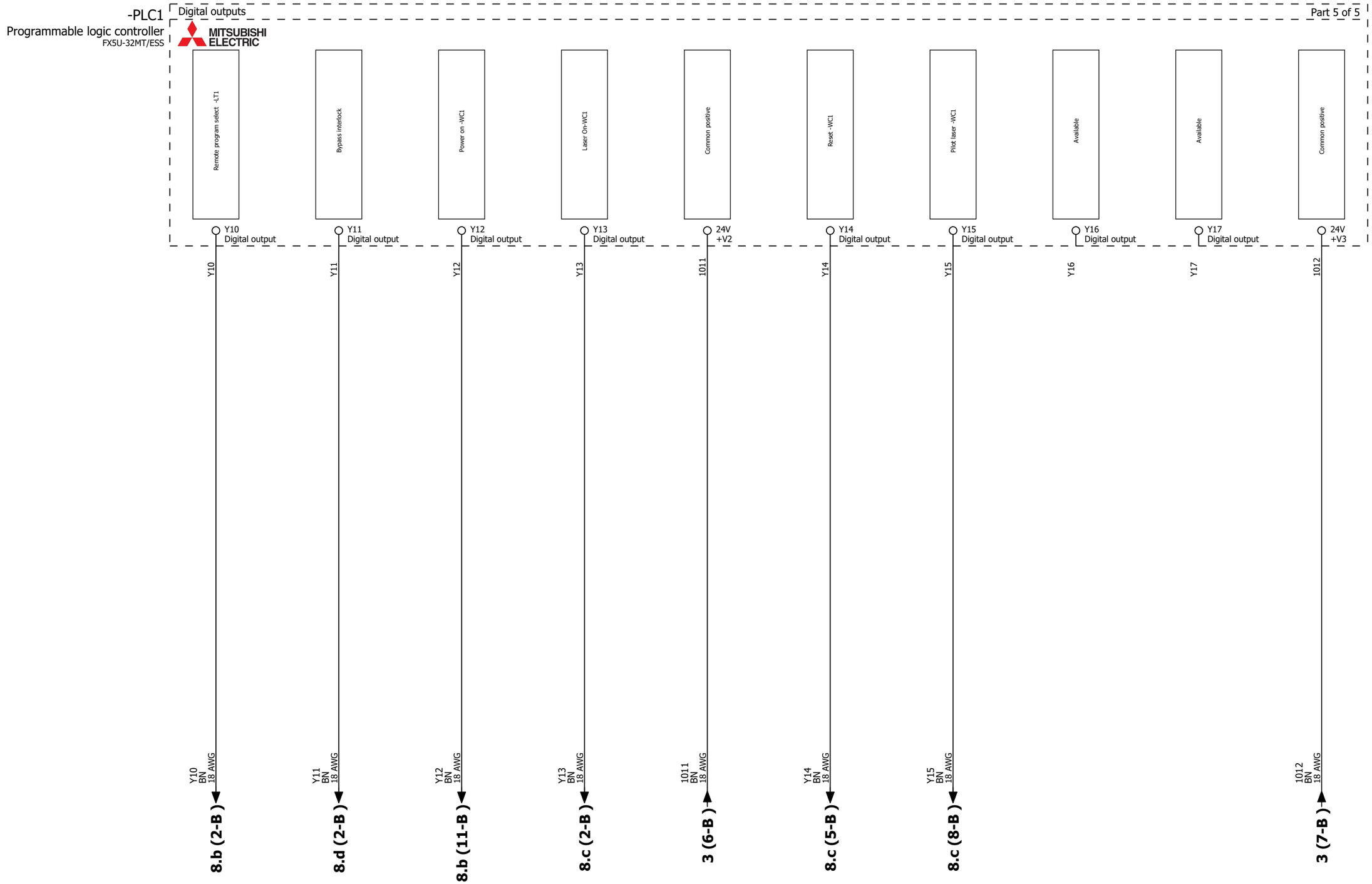
-PLC1
Programmable logic controller
FX5U-32MT/ESS
MITSUBISHI ELECTRIC
Digital outputs
Part 5 of 5
Remote program select -LT1
Bypass interlock
Power on -WC1
Laser On-WC1
Common positive
Reset -WC1
Pilot laser -WC1
Available
Available
Common positive
Y10 Digital output
Y11 Digital output
Y12 Digital output
Y13 Digital output
24V +V2
Y14 Digital output
Y15 Digital output
Y16 Digital output
Y17 Digital output
24V +V3
Y10
Y11
Y12
Y13
1011
Y14
Y15
Y16
Y17
1012
Y10 BN 18 AWG
Y11 BN 18 AWG
Y12 BN 18 AWG
Y13 BN 18 AWG
1011 BN 18 AWG
Y14 BN 18 AWG
Y15 BN 18 AWG
1012 BN 18 AWG
8.b (2-B)
8.d (2-B)
8.b (11-B)
8.c (2-B)
3 (6-B)
8.c (5-B)
8.c (8-B)
3 (7-B)

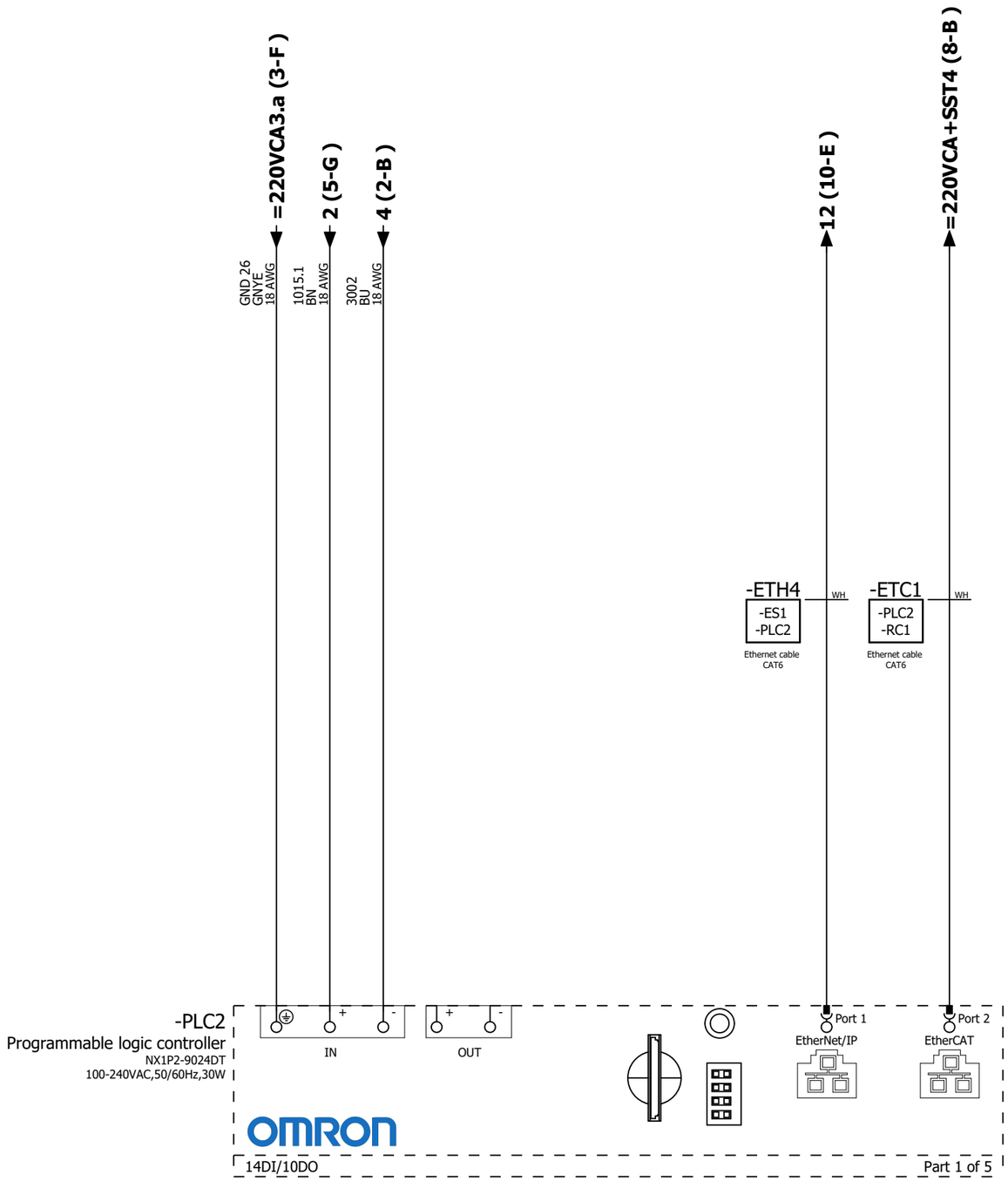
=220VCA3.a (3-F)
2 (5-G)
4 (2-B)
12 (10-E)
=220VCA+SST4 (8-B)
GND 26
GNYE
18 AWG
1015.1
BN
18 AWG
3002
BU
18 AWG
-ETH4
-ES1
-PLC2
Ethernet cable
CAT6
WH
-ETC1
-PLC2
-RC1
Ethernet cable
CAT6
WH
-PLC2
Programmable logic controller
NX1P2-9024DT
100-240VAC,50/60Hz,30W
IN
OUT
Port 1
EtherNet/IP
Port 2
EtherCAT
OMRON
14DI/10DO
Part 1 of 5

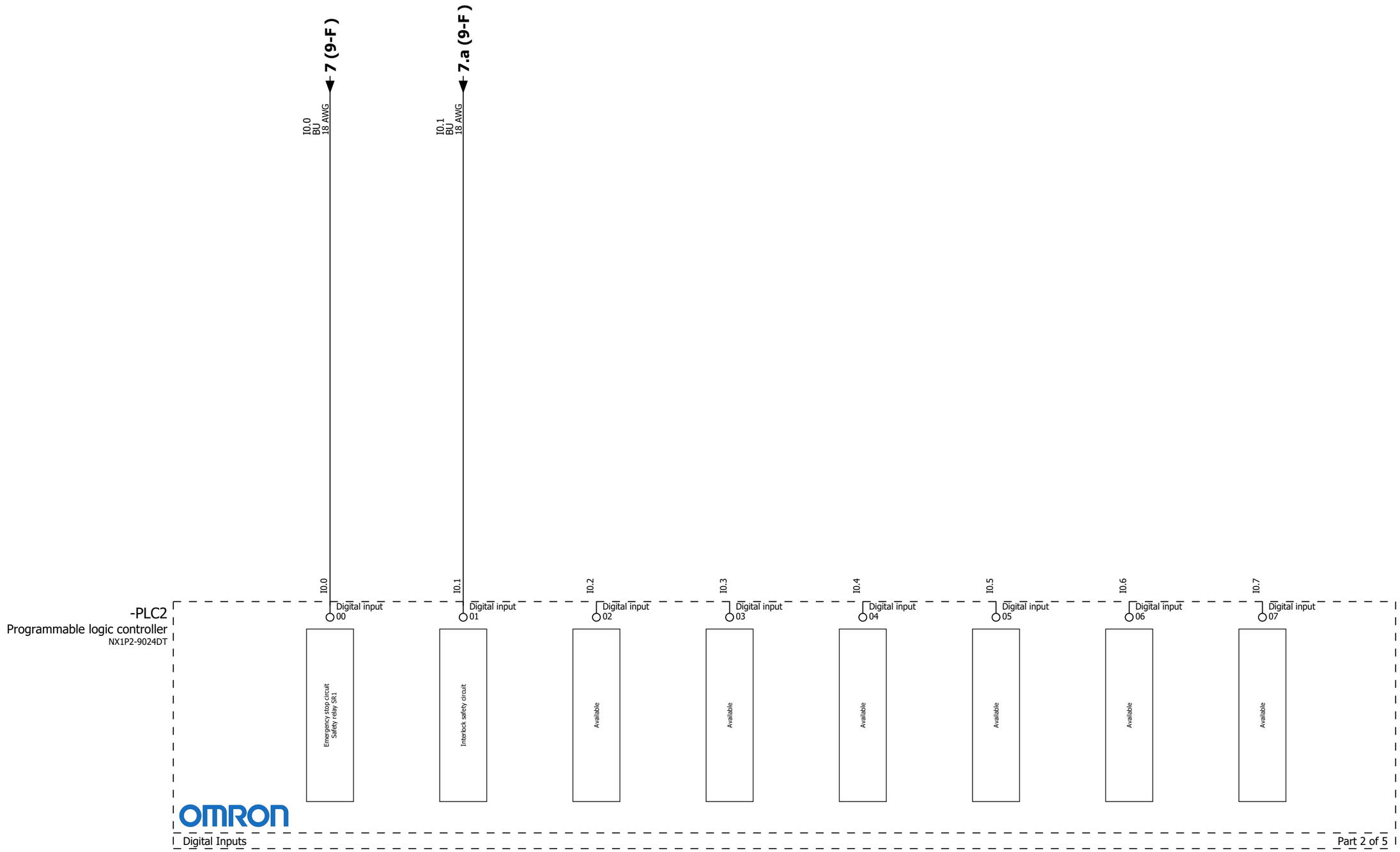

Automatyco®	Automatización, Mantenimiento y Construcción Condominio Industrial Siglo 21, Av. Siglo 21 #50 int #115, Valle de Santa Cruz, CP 45640 Tlajomulco de Zuñiga, Jal, Mex.	O.P. 978	Created	05/01/2026	Project's name	Page name	Facility 24VCD
		Client: Pegatron	Modified	12/01/2026	ATLAS CP	PLC/Digital inputs connections	Mounting location GC
		PEGATRON	Revision	0	Station name		Sheet 5.g
			Responsible	A.Yepez	ST 30		Page 57 / 123

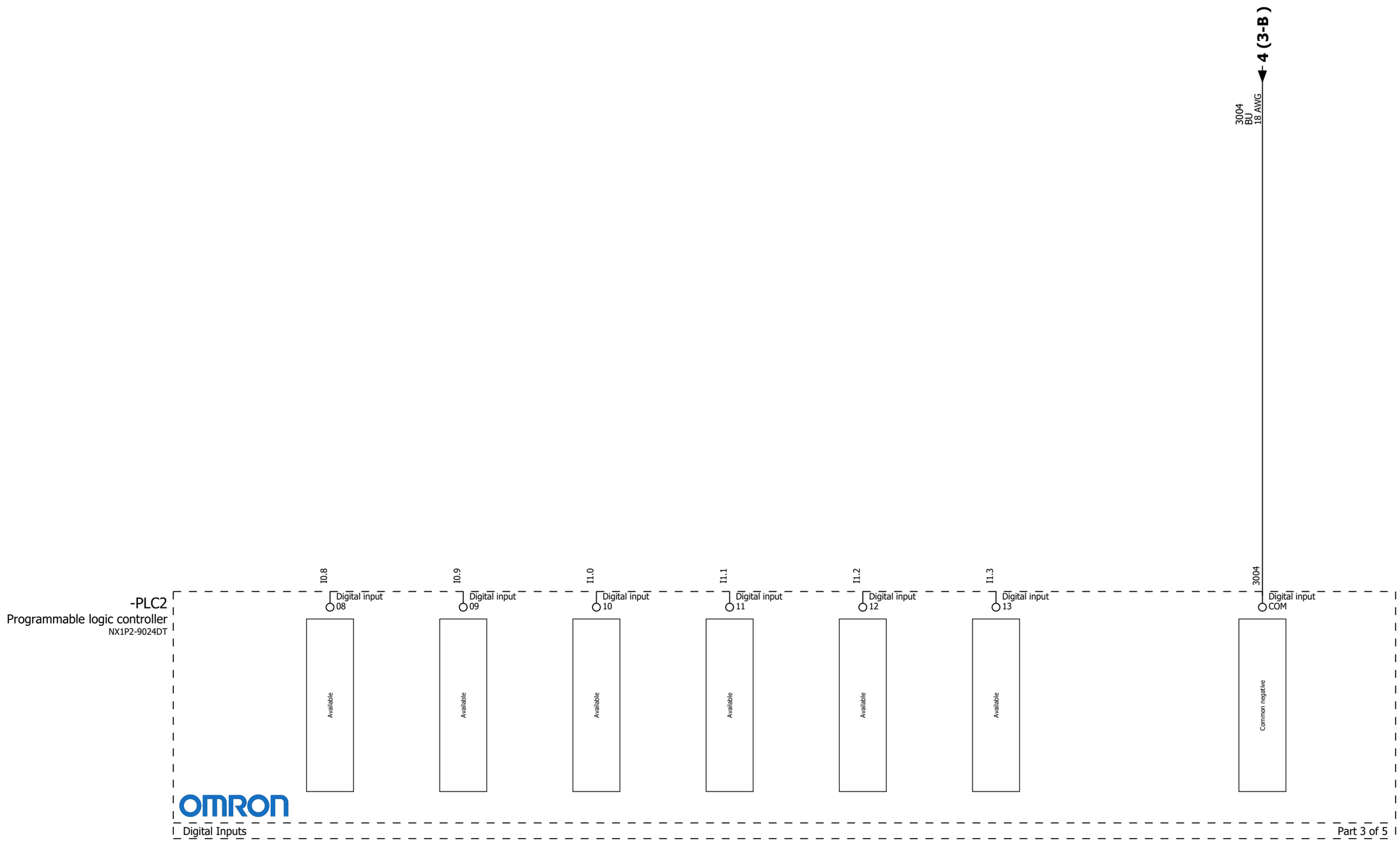
4 (3-B)
3004
BU
18 AWG
-PLC2
Programmable logic controller
NX1P2-9024DT
I0.8
Digital input
08
I0.9
Digital input
09
I1.0
Digital input
10
I1.1
Digital input
11
I1.2
Digital input
12
I1.3
Digital input
13
3004
Digital input
COM
Available
Available
Available
Available
Available
Available
Common negative
OMRON
Digital Inputs
Part 3 of 5

-PLC2

Programmable logic controller

NX1P2-9024DT

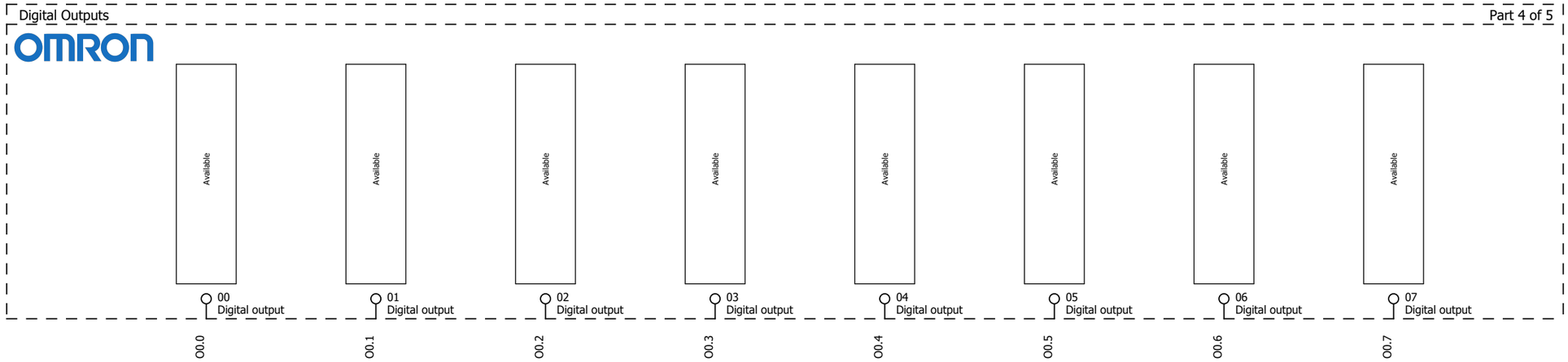

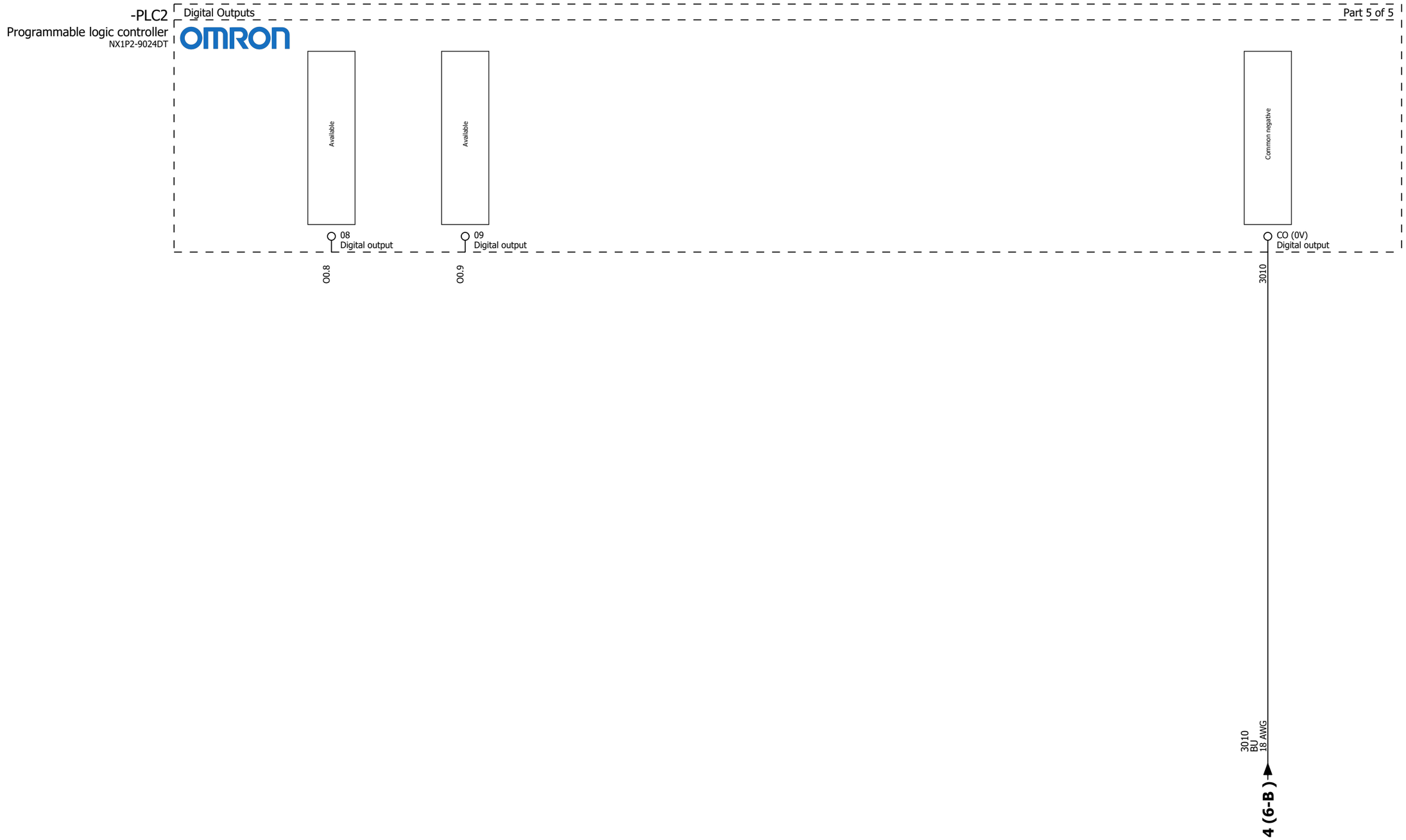

Automatyco®	Automatización, Mantenimiento y Construcción Condominio Industrial Siglo 21, Av. Siglo 21 #50 int #115, Valle de Santa Cruz, CP 45640 Tlajomulco de Zuñiga, Jal, Mex.	O.P. 978	Created	05/01/2026	Project's name	Page name	Facility 24VCD
		Client: Pegatron	Modified	12/01/2026	ATLAS CP	PLC/Digital outputs connections	Mounting location GC
		PEGATRON	Revision	0	Station name		Sheet 5.j
			Responsible	A.Yepez	ST 30		Page 60 / 123

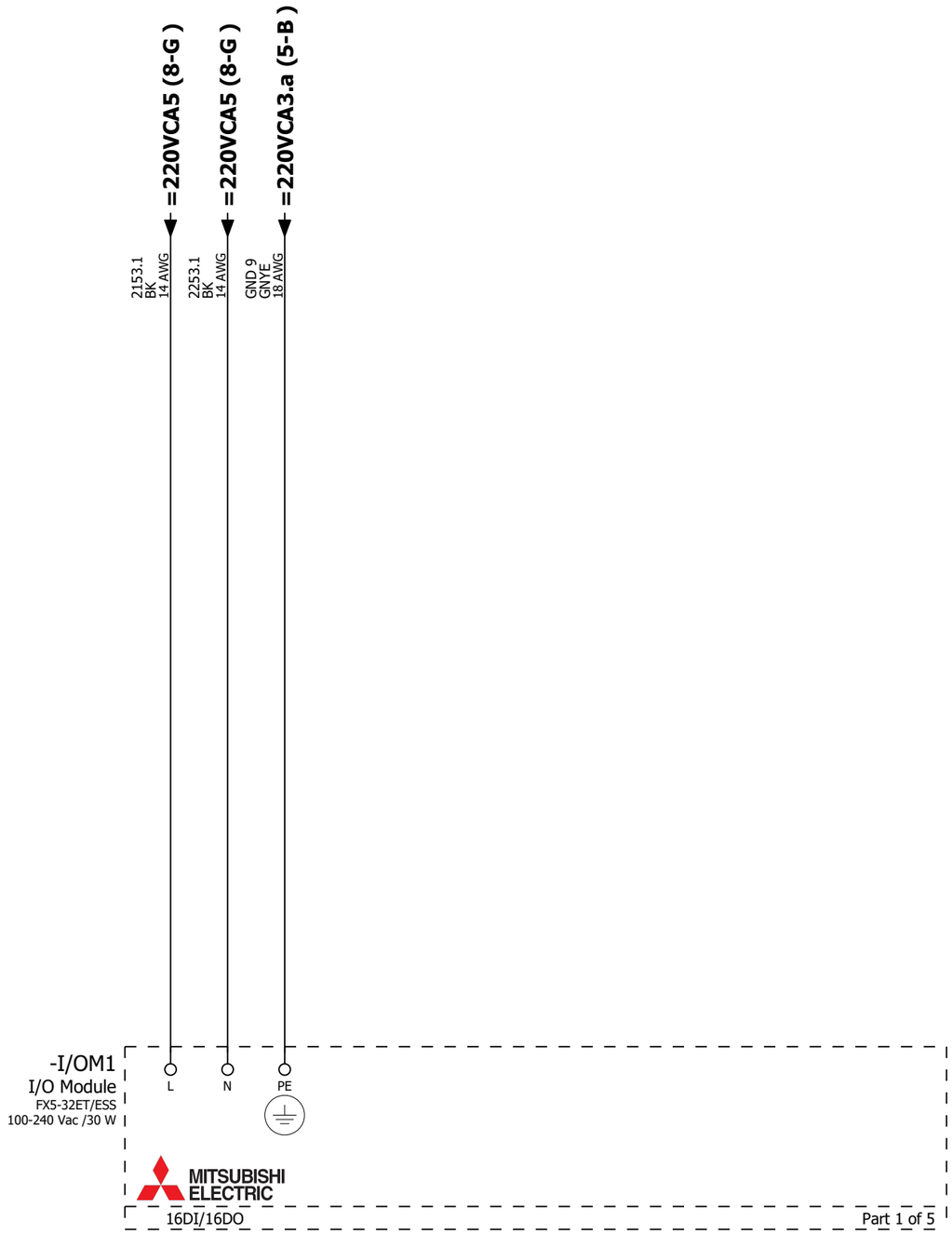

Automatyco®	Automatización, Mantenimiento y Construcción Condominio Industrial Siglo 21, Av. Siglo 21 #50 int #115, Valle de Santa Cruz, CP 45640 Tlajomulco de Zuñiga, Jal, Mex.	O.P. 978	Created	08/01/2026	Project's name	Page name	Facility 24VCD
		Client: Pegatron	Modified	30/03/2026	ATLAS CP	I/O Module connections	Mounting location GC
		PEGATRON	Revision	0	Station name		Sheet 5.k
			Responsible	A.Yepez	ST 30		Page 61 / 123

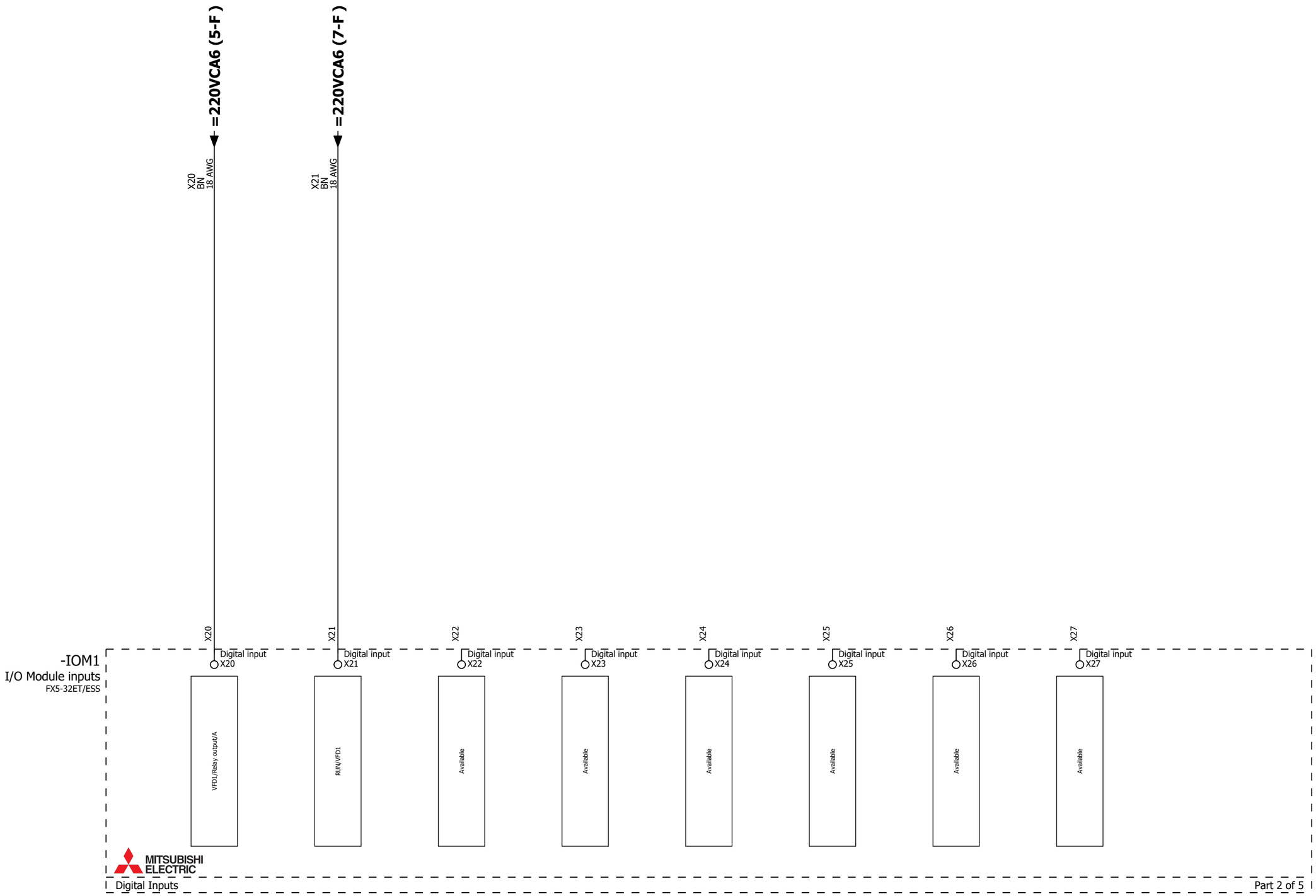

Automatyco®
Automatización, Mantenimiento y Construcción
Condominio Industrial Siglo 21, Av. Siglo 21 #50 int #115, Valle de Santa Cruz, CP 45640
Tlajomulco de Zuñiga, Jal, Mex.

O.P. 978	Created	08/01/2026	Project's name	Page name	Facility 24VCD
Client: Pegatron	Modified	09/01/2026	ATLAS CP	I/O Module inputs connections	Mounting location GC
PEGATRON	Revision	0	Station name		Sheet 5.I
	Responsible	A.Yepez	ST 30		Page 62 / 123

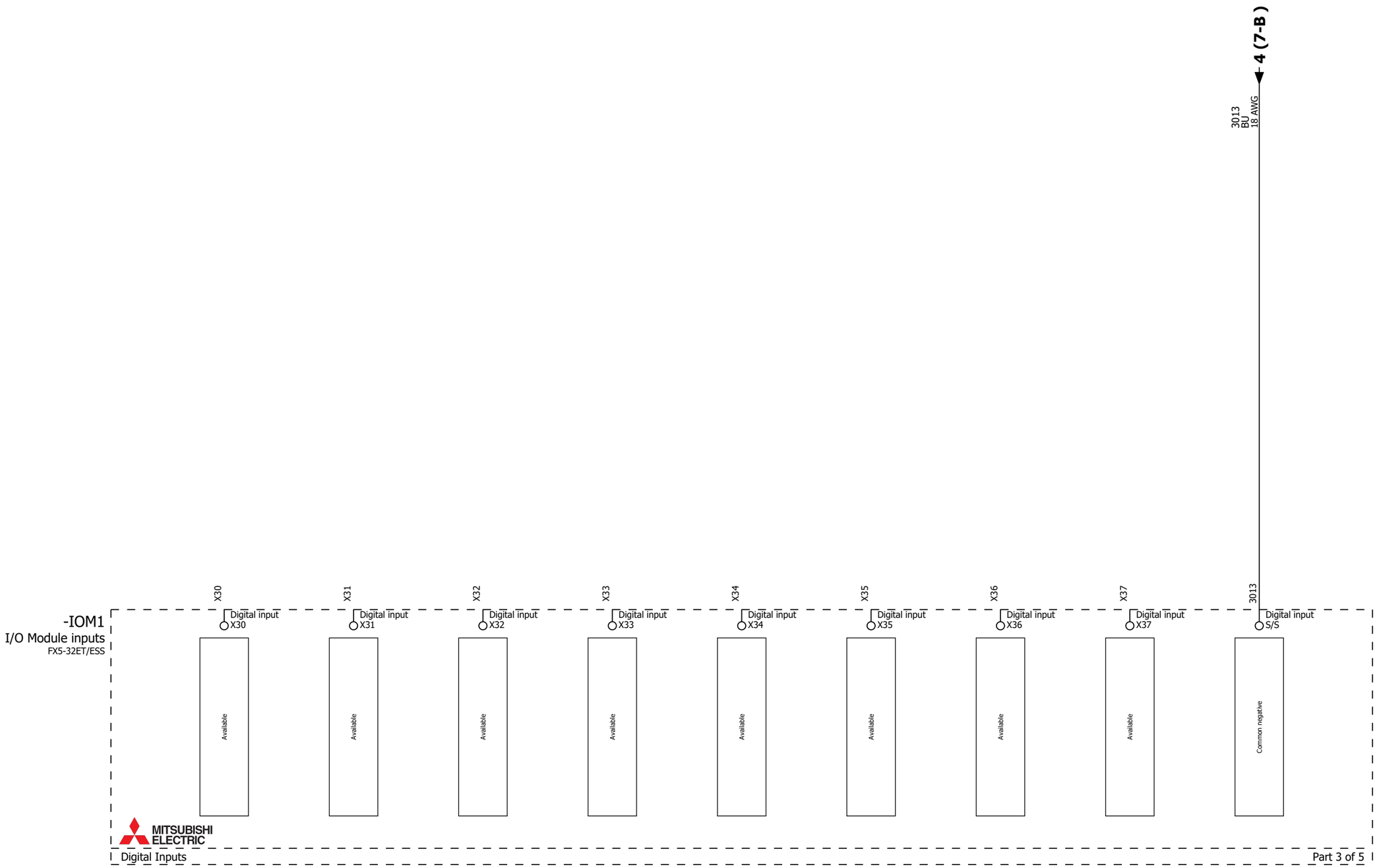

Automatyco®	Automatización, Mantenimiento y Construcción Condominio Industrial Siglo 21, Av. Siglo 21 #50 int #115, Valle de Santa Cruz, CP 45640 Tlajomulco de Zuñiga, Jal, Mex.	O.P. 978	Created	08/01/2026	Project's name	Page name	Facility 24VCD
		Client: Pegatron	Modified	12/01/2026	ATLAS CP	I/O Module inputs connections	Mounting location GC
		PEGATRON	Revision	0	Station name		Sheet 5.m
			Responsible	A.Yepez	ST 30		Page 63 / 123

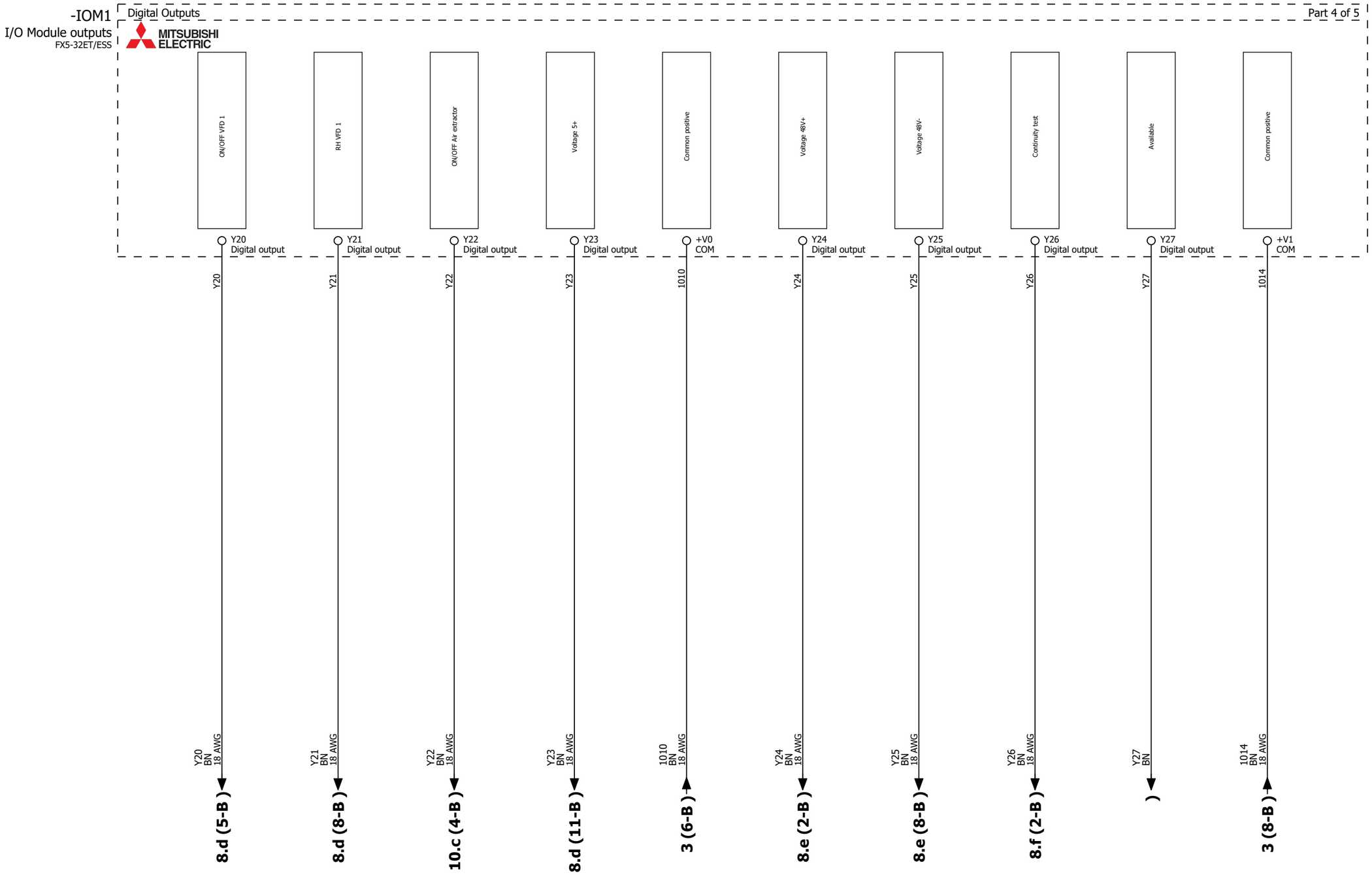

Automatyco®	Automatización, Mantenimiento y Construcción Condominio Industrial Siglo 21, Av. Siglo 21 #50 int #115, Valle de Santa Cruz, CP 45640 Tlajomulco de Zuñiga, Jal, Mex.	O.P. 978	Created 08/01/2026	Project's name ATLAS CP	Page name I/O Module outputs connections	Facility 24VCD
		Client: Pegatron	Modified 23/03/2026			Mounting location GC
		PEGATRON	Revision 0	Station name ST 30		Sheet 5.n
			Responsible A.Yepez			Page 64 / 123

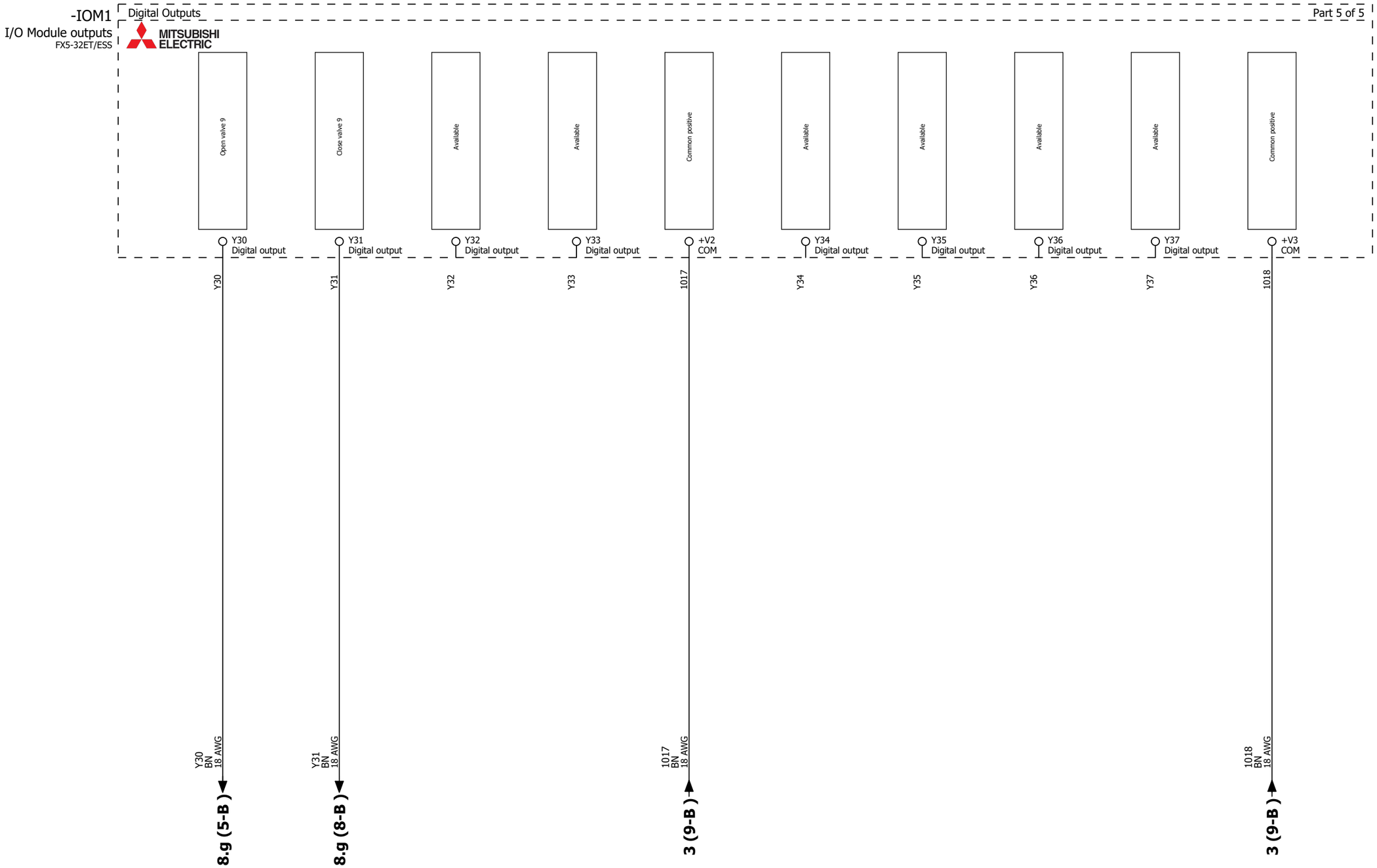

Automatyco®	Automatización, Mantenimiento y Construcción Condominio Industrial Siglo 21, Av. Siglo 21 #50 int #115, Valle de Santa Cruz, CP 45640 Tlajomulco de Zuñiga, Jal, Mex.	O.P. 978	Created	08/01/2026	Project's name	Page name	Facility 24VCD
		Client: Pegatron	Modified	19/02/2026	ATLAS CP	I/O Module outputs connections	Mounting location GC
		PEGATRON	Revision	0	Station name		Sheet 5.o
			Responsible	A.Yepez	ST 30		Page 65 / 123

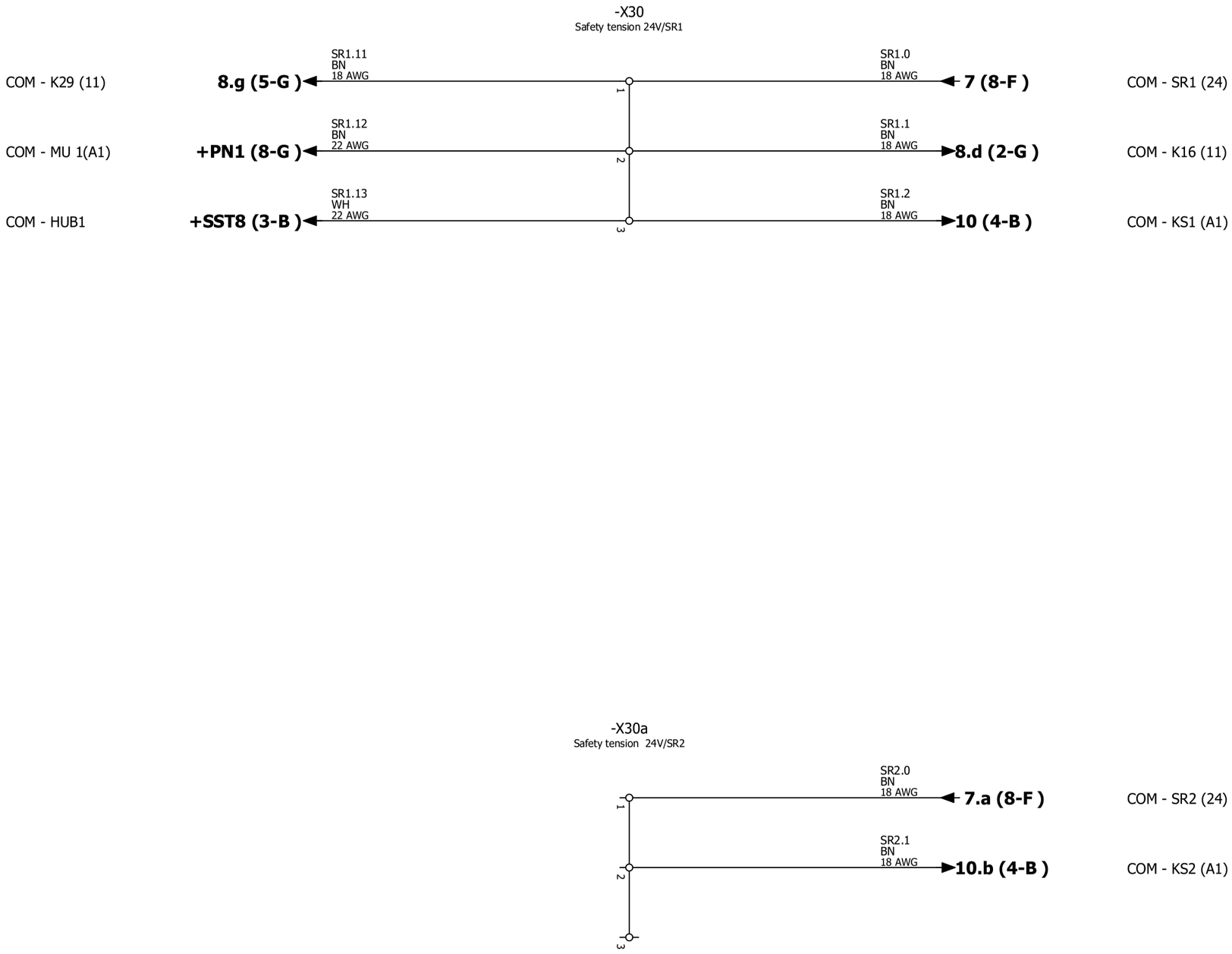

Automatyco

Automatización, Mantenimiento y Construcción
Condominio Industrial Siglo 21,
Av. Siglo 21 #50 Int #115,
Valle de Santa Cruz, CP 45640
Tlajomulco de Zúñiga, Jal, Mex.

O.P. 978

Client:
Pegatron

PEGATRON

Created	05/01/2026	Project's name	ATLAS CP
Modified	19/02/2026	Station name	ST 30
Revision	0		
Responsible	A.Yepez		

Page name
Safety terminal connections

Facility 24VCD
Mounting location GC

Sheet 6
Page 66 / 123

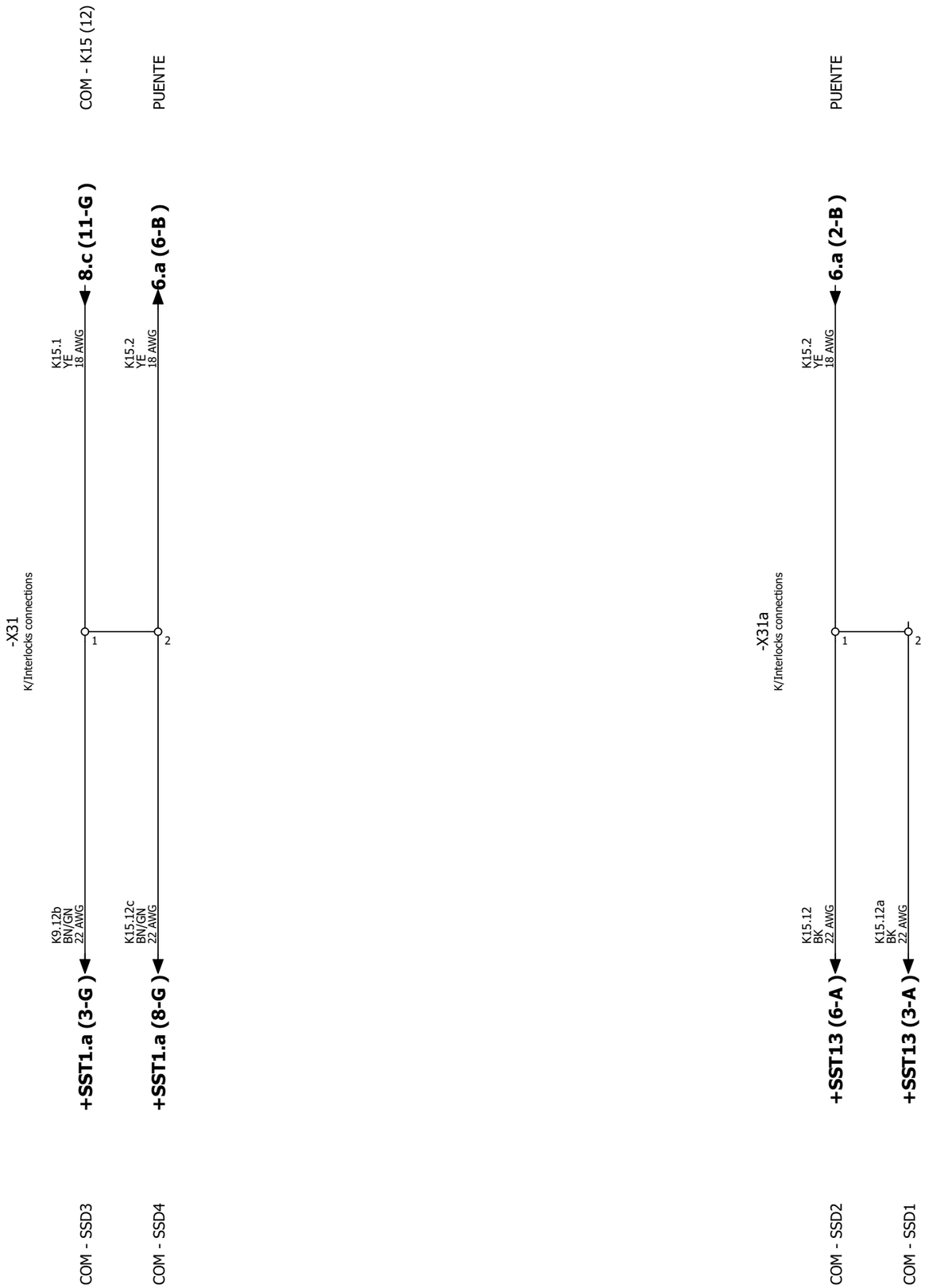

Automatyco®	Automatización, Mantenimiento y Construcción Condominio Industrial Siglo 21, Av. Siglo 21 #50 int #115, Valle de Santa Cruz, CP 45640 Tlajomulco de Zuñiga, Jal, Mex.	O.P. 978	Created	26/01/2026	Project's name	Page name	Facility 24VCD
		Client: Pegatron	Modified	31/03/2026	ATLAS CP	Safety terminal connections	Mounting location GC
		PEGATRON	Revision	0	Station name		Sheet 6.a
			Responsible	A.Yepez	ST 30		Page 67 / 123

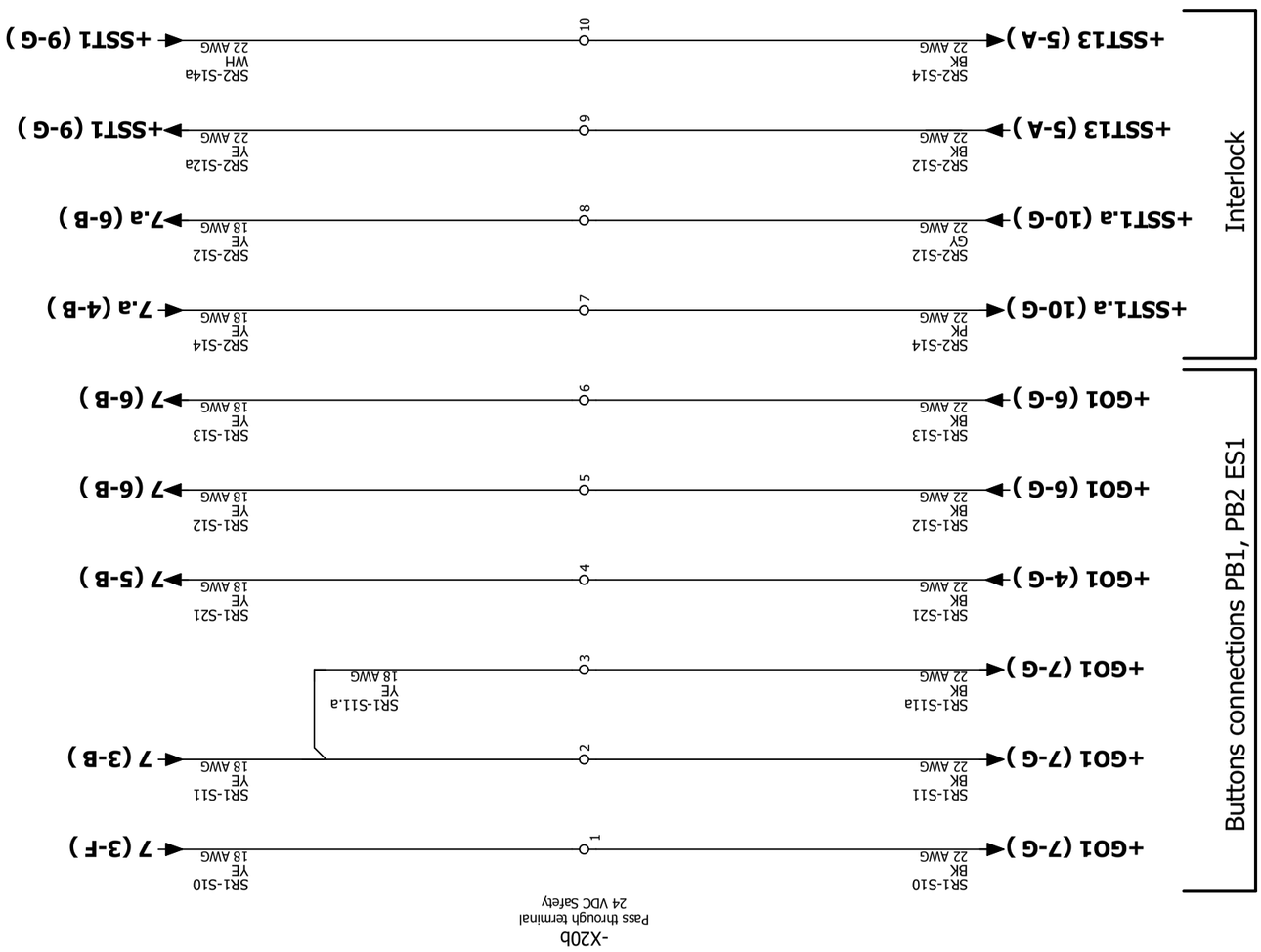

Automatyco®	Automatización, Mantenimiento y Construcción Condominio Industrial Siglo 21, Av. Siglo 21 #50 Int. #115, Valle de Santa Cruz, CP 45640 Tlajomulco de Zúñiga, Jal, Mex.	O.P. 978	Client: Pegatron

PEGATRON

Created	05/01/2026
Modified	01/06/2026
Revision	0
Responsible	A.Yepez

Project's name	ATLAS CP
Station name	ST 30
Page name	Safety terminal connections
Facility	24VCD
Mounting location	GC
Sheet	6.b
Page	68 / 123

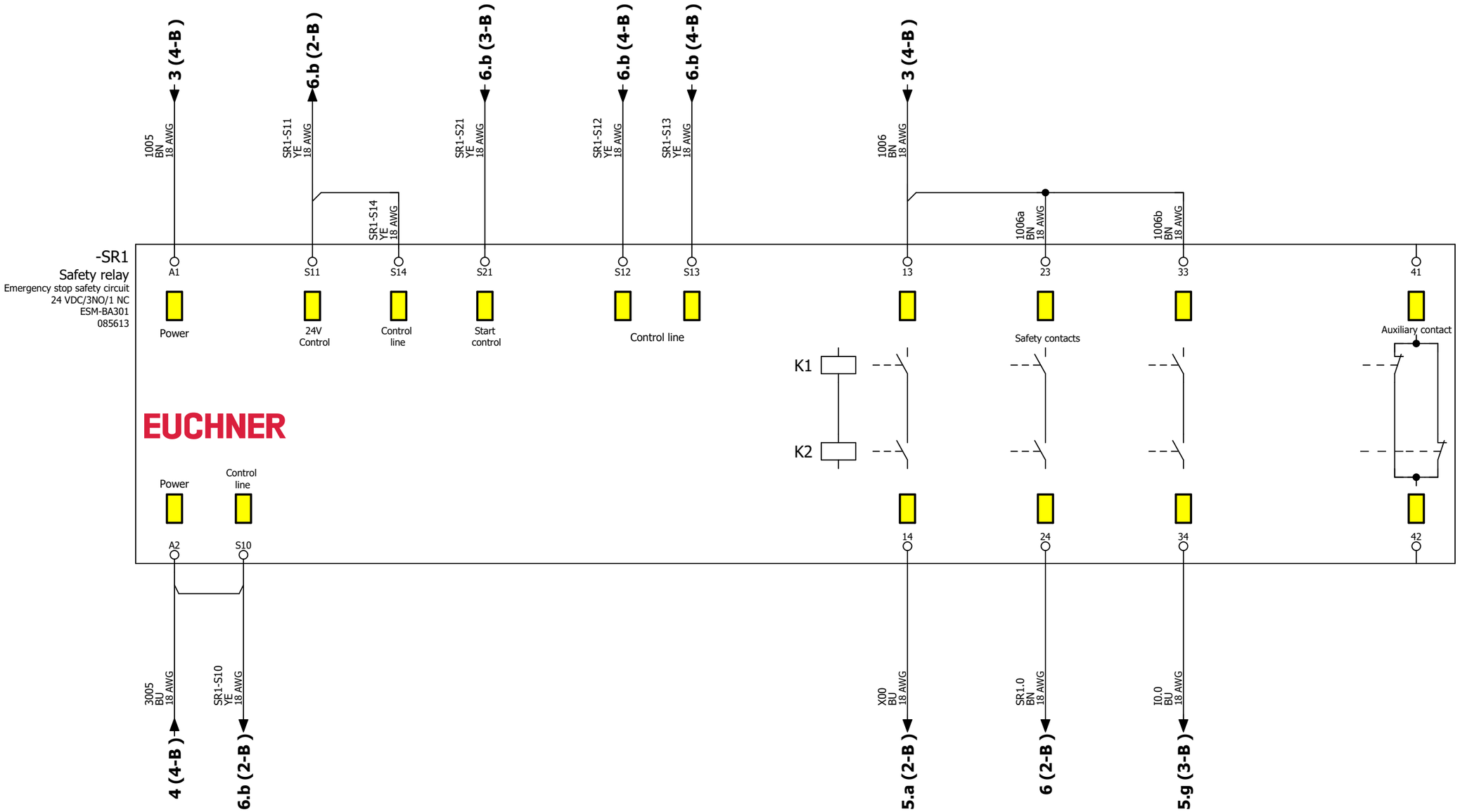

Automatyco®	Automatización, Mantenimiento y Construcción Condominio Industrial Siglo 21, Av. Siglo 21 #50 int #115, Valle de Santa Cruz, CP 45640 Tlajomulco de Zuñiga, Jal, Mex.	O.P. 978	Created	05/01/2026	Project's name	Page name	Facility 24VCD
		Client: Pegatron	Modified	26/01/2026	ATLAS CP	Safety relay connections SR1	Mounting location GC
		PEGATRON	Revision	0	Station name		Sheet 7
			Responsible	A.Yepez	ST 30		Page 69 / 123

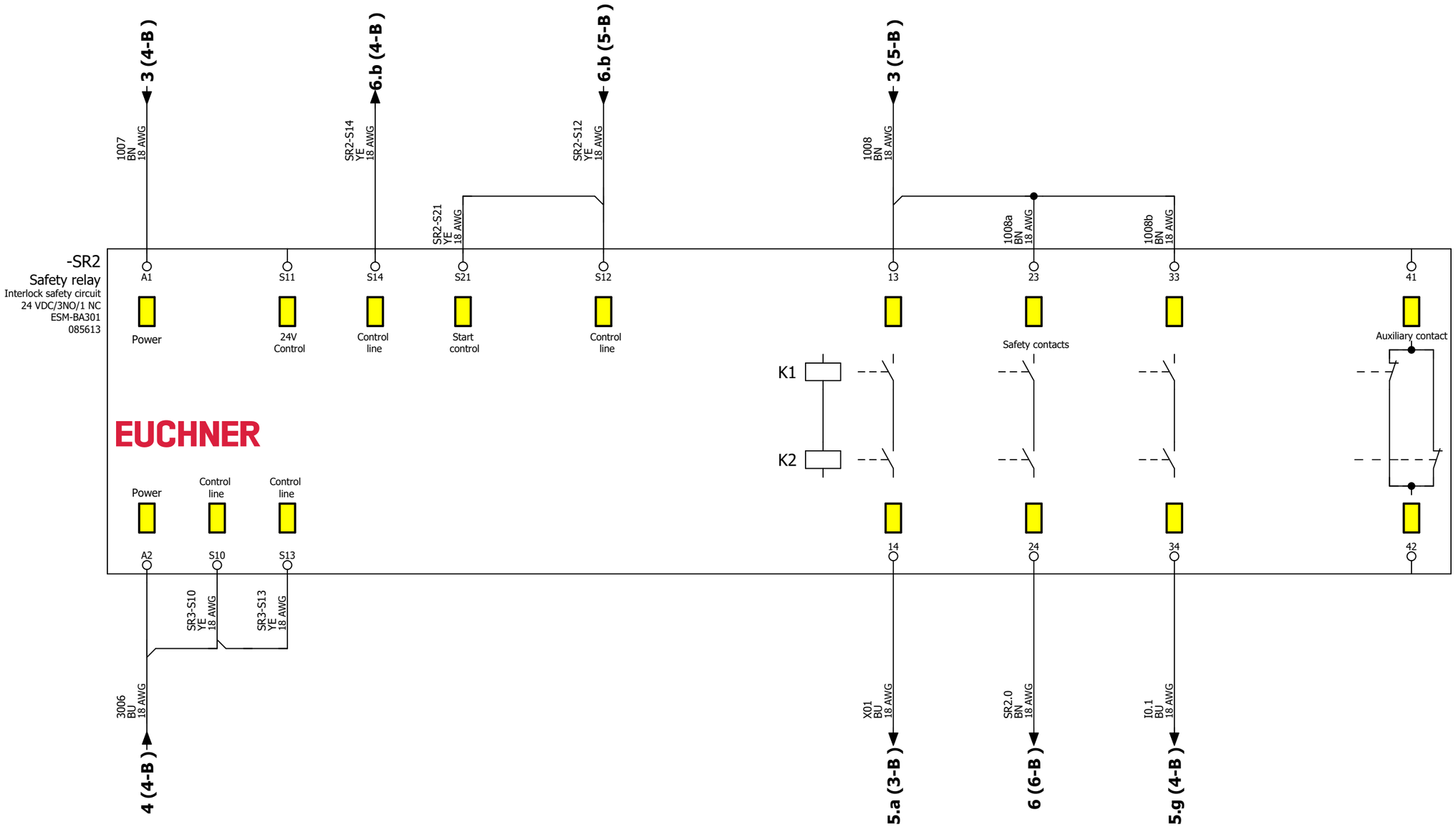

Automatyco®
Automatización, Mantenimiento y Construcción
Condominio Industrial Siglo 21, Av. Siglo 21 #50 int #115, Valle de Santa Cruz, CP 45640
Tlajomulco de Zuñiga, Jal, Mex.

O.P. 978	Created	05/01/2026	
Client: Pegatron	Modified	31/03/2026	
PEGATRON	Revision	0	
	Responsible	A.Yepez	

Project's name	ATLAS CP
Station name	ST 30
Page name	Safety relay connections SR2
Facility	24VCD
Mounting location	GC
Sheet	7.a
Page	70 / 123

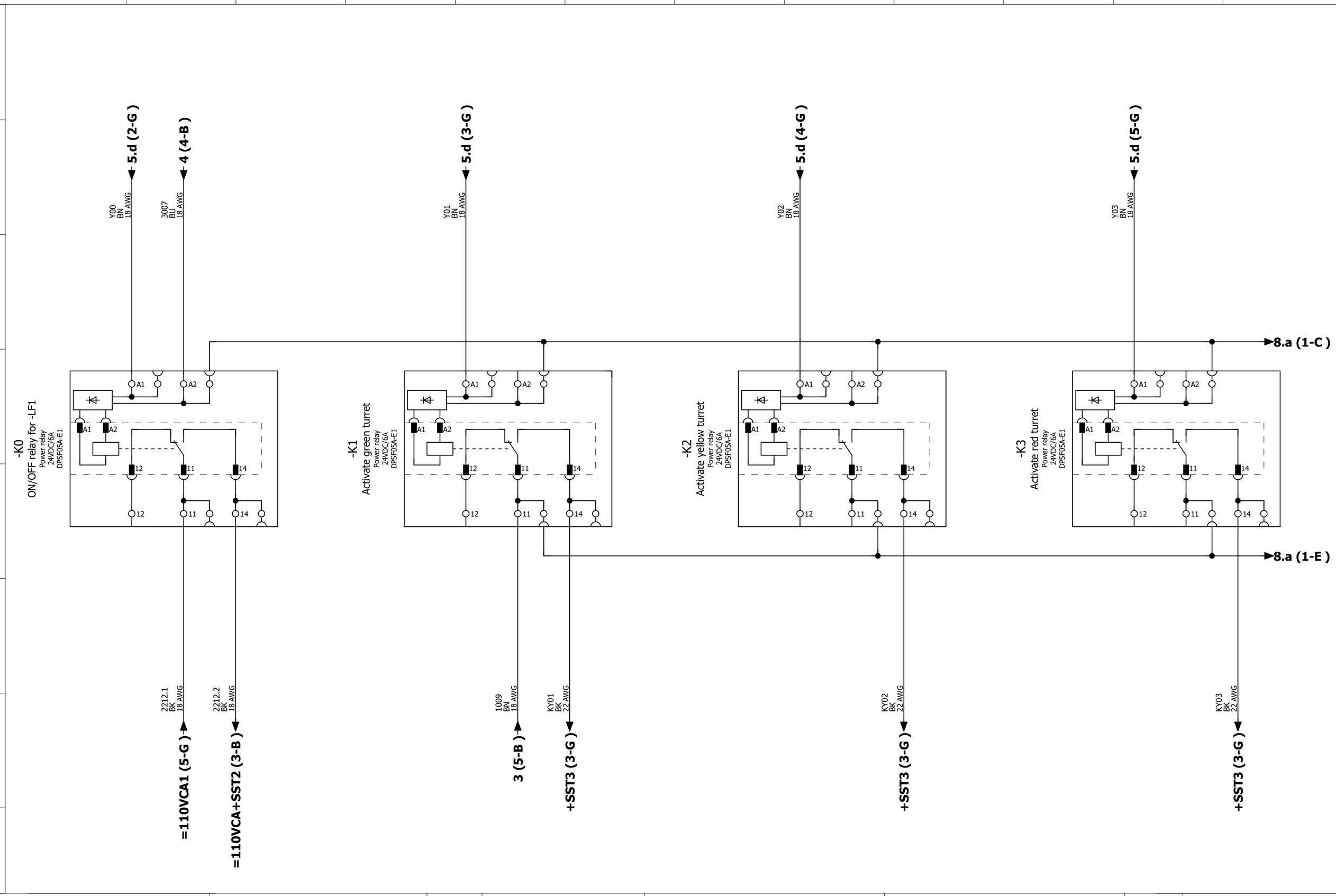

Automatyco®	Automatización, Mantenimiento y Construcción Condominio Industrial Siglo 21, Av. Siglo 21 #50 int #115, Valle de Santa Cruz, CP 45640 Tlajomulco de Zuñiga, Jal, Mex.	O.P. 978	Created	05/01/2026	Project's name	Page name	Facility 24VCD
		Client: Pegatron	Modified	31/03/2026	ATLAS CP	Power relay connections	Mounting location GC
		PEGATRON	Revision	0	Station name		Sheet 8
			Responsible	A.Yepez	ST 30		Page 71 / 123

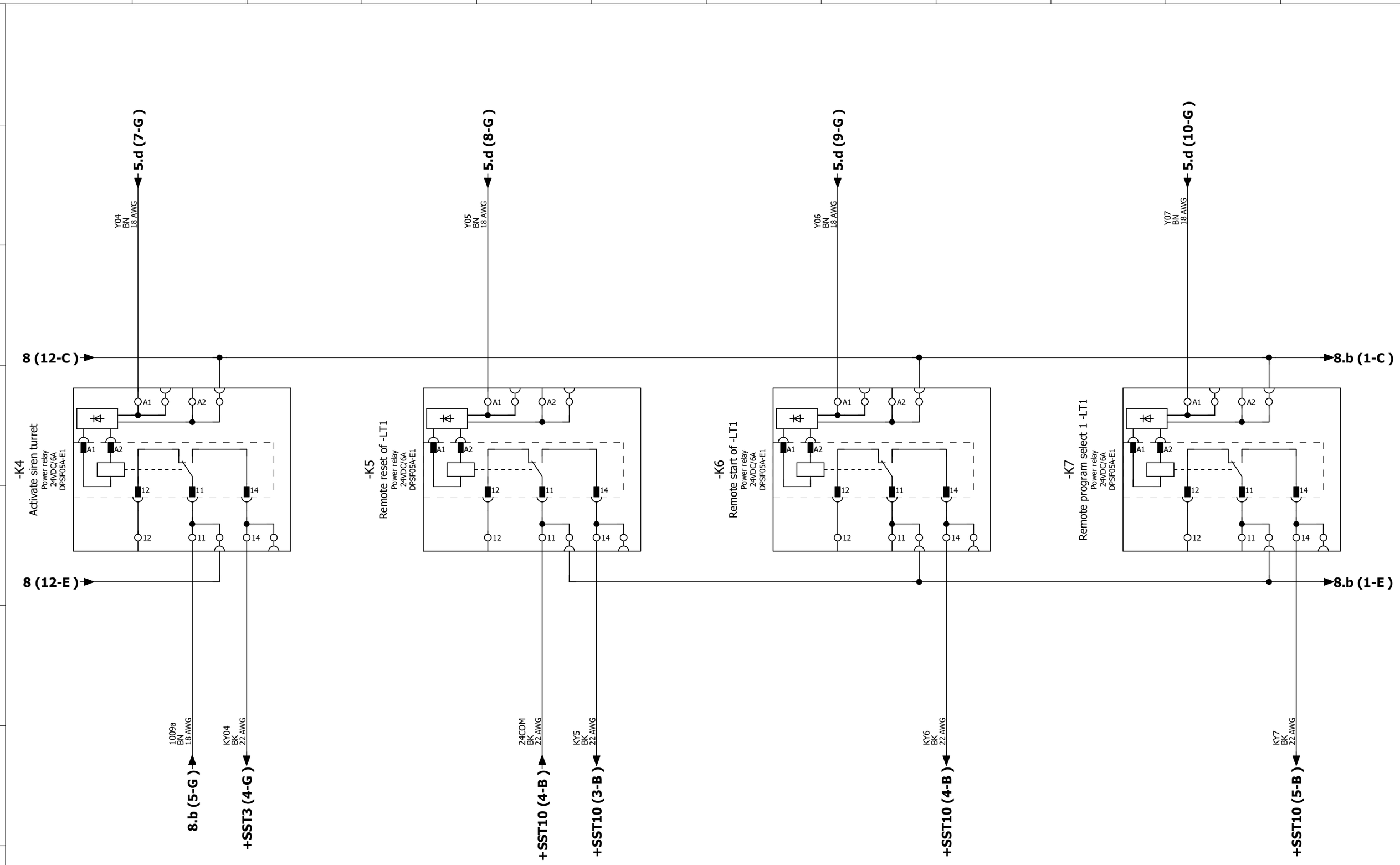

Automatyco®	Automatización, Mantenimiento y Construcción Condominio Industrial Siglo 21, Av. Siglo 21 #50 int #115, Valle de Santa Cruz, CP 45640 Tlajomulco de Zuñiga, Jal, Mex.	O.P. 978	Created	05/01/2026	Project's name	Page name	Facility 24VCD
		Client: Pegatron	Modified	31/03/2026	ATLAS CP	Power relay connections	Mounting location GC
		PEGATRON	Revision	0	Station name		Sheet 8.a
			Responsible	A.Yepez	ST 30		Page 72 / 123

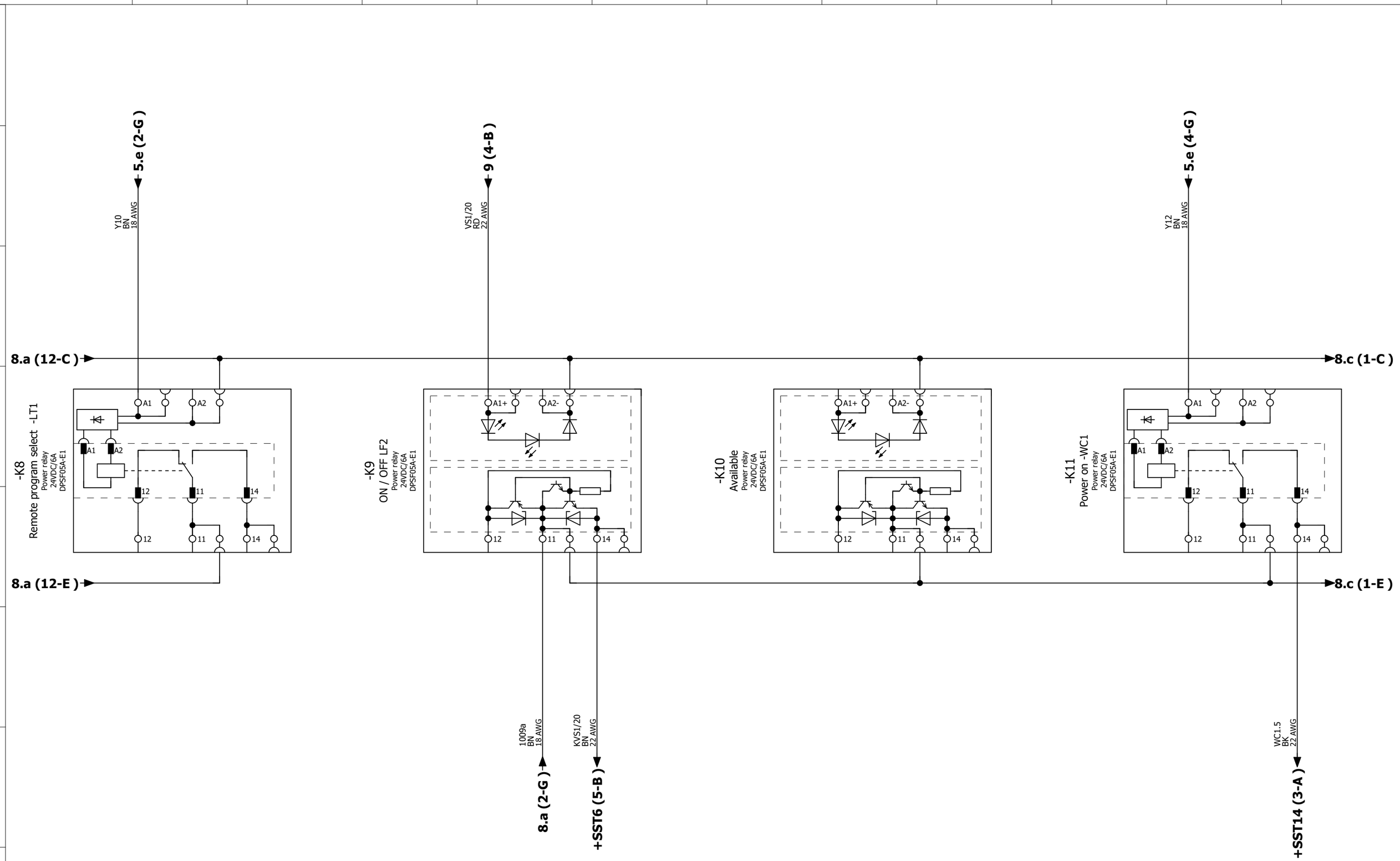

Automatyco®	Automatización, Mantenimiento y Construcción Condominio Industrial Siglo 21, Av. Siglo 21 #50 int #115, Valle de Santa Cruz, CP 45640 Tlajomulco de Zuñiga, Jal, Mex.	O.P. 978	Created	05/01/2026	Project's name	Page name	Facility 24VCD
		Client: Pegatron	Modified	31/03/2026	ATLAS CP	Power relay connections	Mounting location GC
		PEGATRON	Revision	0	Station name		Sheet 8.b
			Responsible	A.Yepez	ST 30		Page 73 / 123

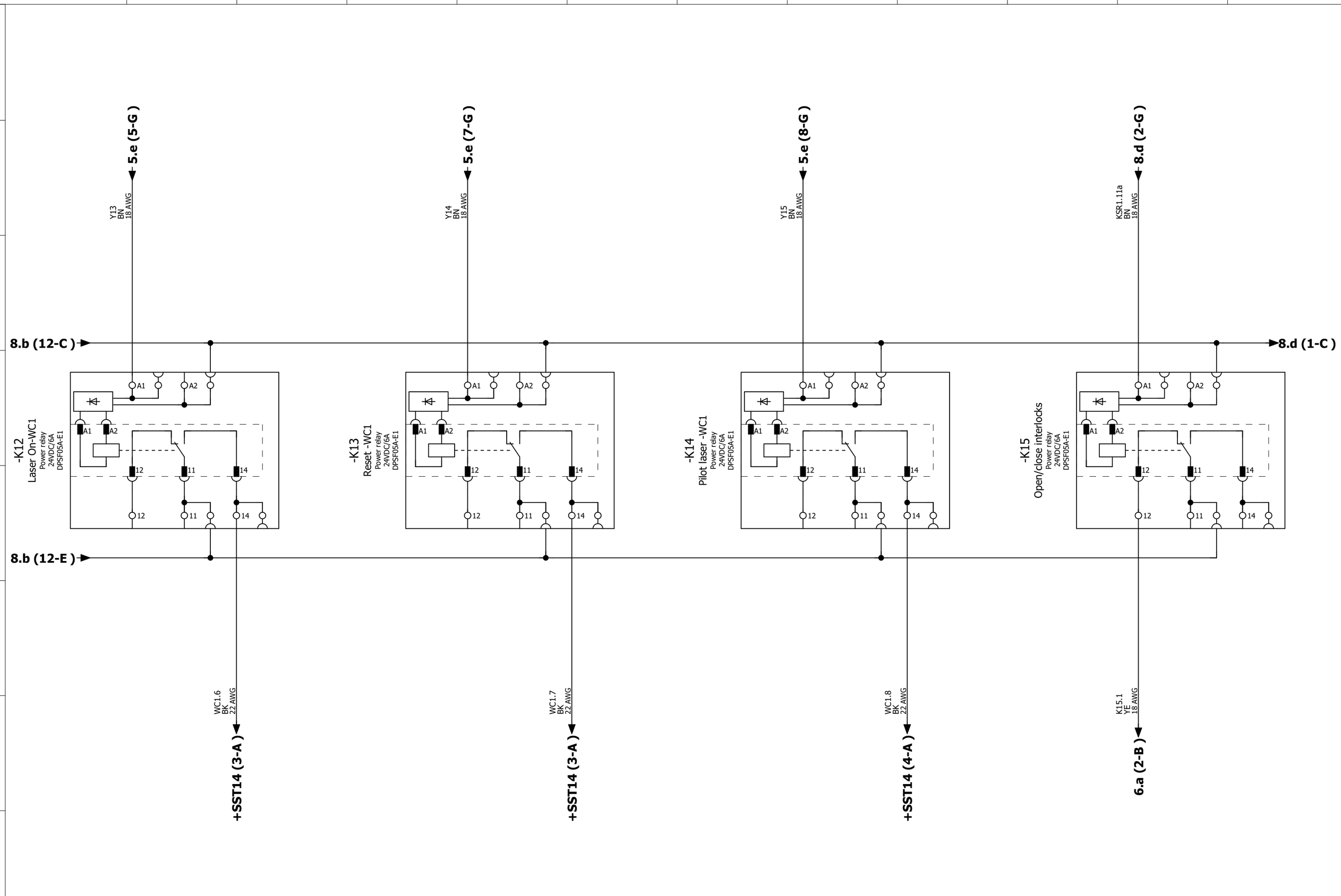

Automatyco®	Automatización, Mantenimiento y Construcción Condominio Industrial Siglo 21, Av. Siglo 21 #50 int #115, Valle de Santa Cruz, CP 45640 Tlajomulco de Zuñiga, Jal, Mex.	O.P. 978	Created	05/01/2026	Project's name	Page name	Facility 24VCD
		Client: Pegatron	Modified	31/03/2026	ATLAS CP	Power relay connections	Mounting location GC
		PEGATRON	Revision	0	Station name		Sheet 8.c
			Responsible	A.Yepez	ST 30		Page 74 / 123

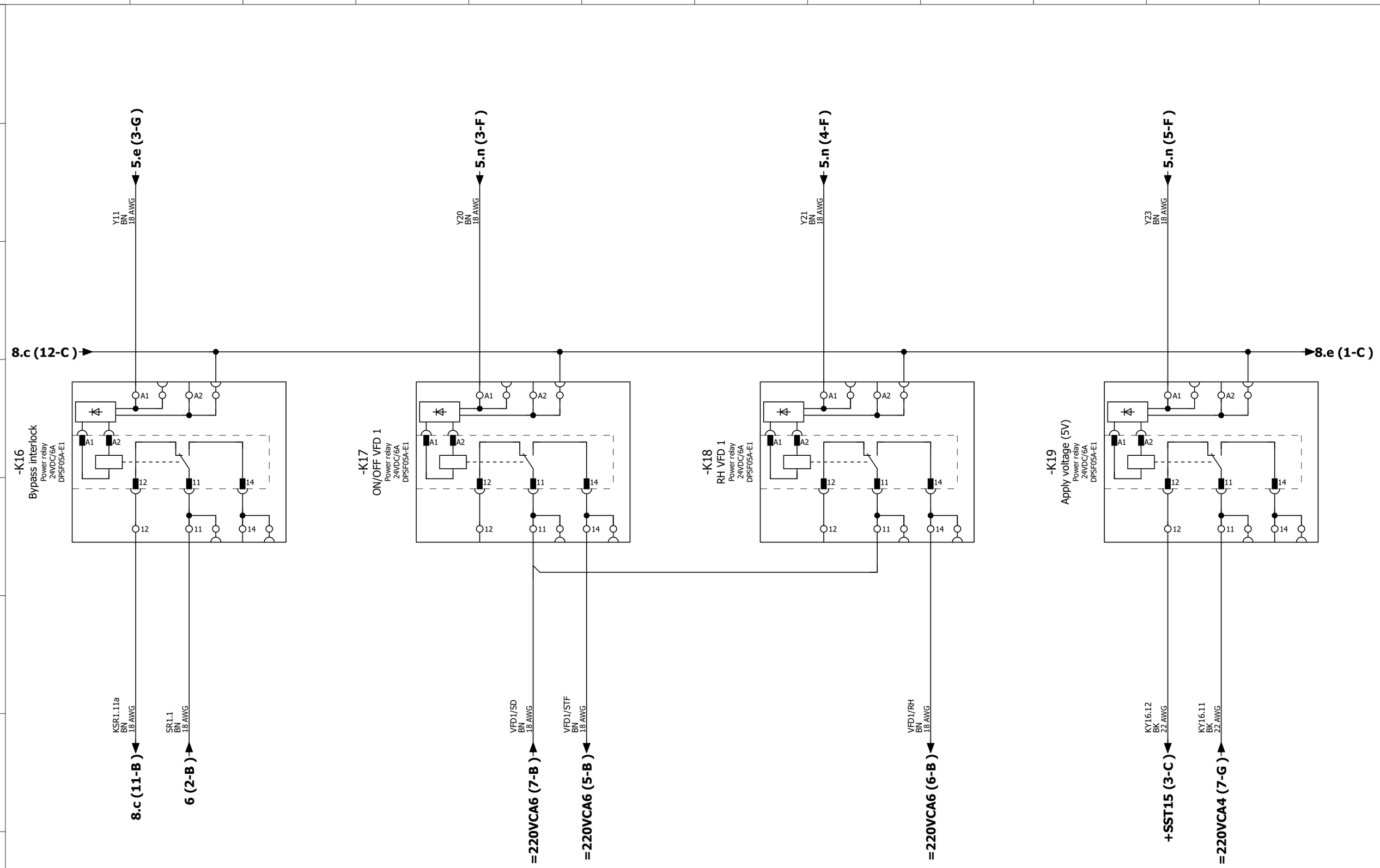

Automatyco®	Automatización, Mantenimiento y Construcción Condominio Industrial Siglo 21, Av. Siglo 21 #50 int #115, Valle de Santa Cruz, CP 45640 Tlajomulco de Zuñiga, Jal, Mex.	O.P. 978	Created 05/01/2026	Project's name ATLAS CP	Page name Power relay connections	Facility 24VCD
		Client: Pegatron	Modified 31/03/2026	Station name ST 30		Mounting location GC
		PEGATRON	Revision 0			Sheet 8.d
			Responsible A.Yepez			Page 75 / 123

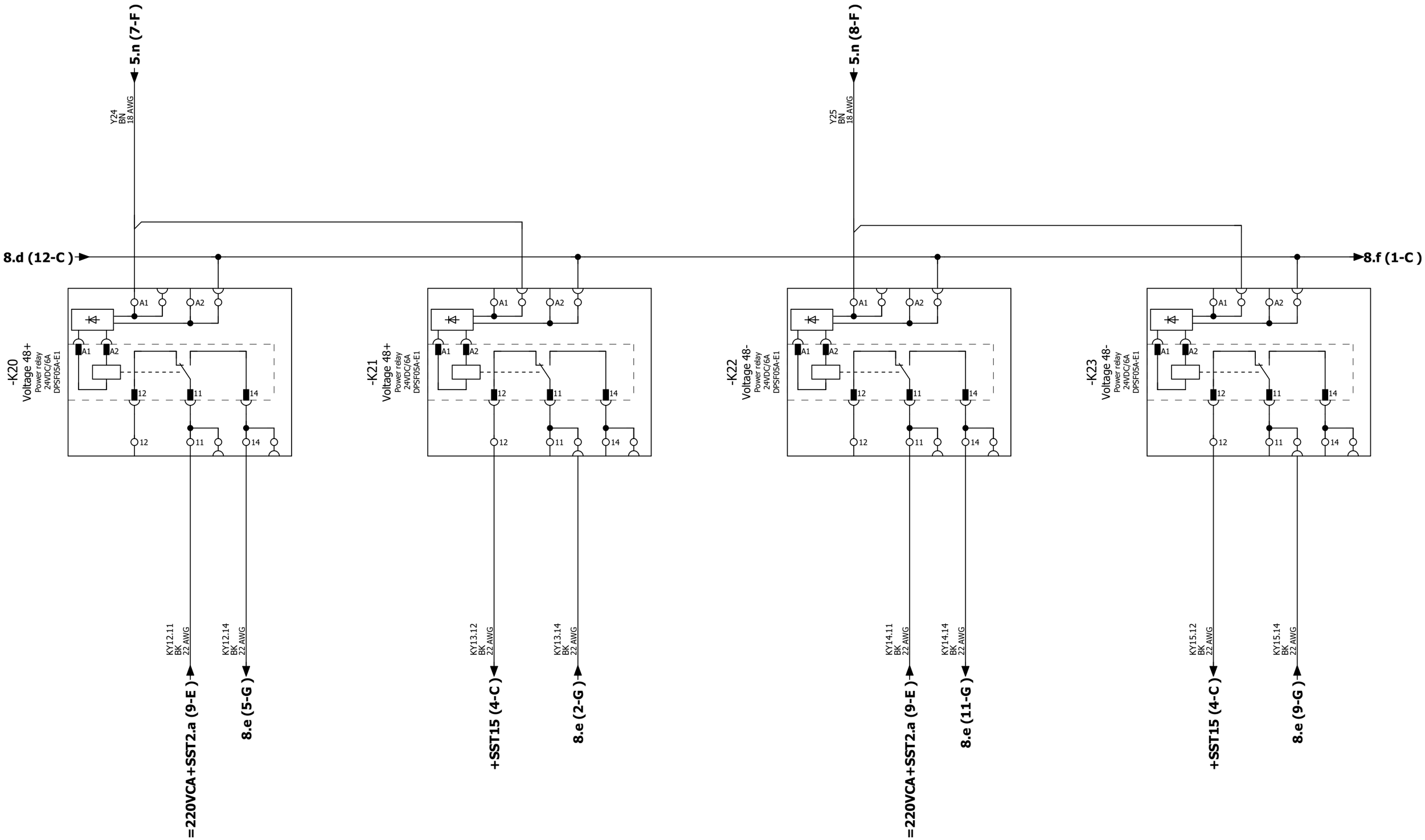

Automatyco®	Automatización, Mantenimiento y Construcción Condominio Industrial Siglo 21, Av. Siglo 21 #50 int #115, Valle de Santa Cruz, CP 45640 Tlajomulco de Zuñiga, Jal, Mex.	O.P. 978	Created	07/01/2026	Project's name	Page name	Facility 24VCD
		Client: Pegatron	Modified	31/03/2026	ATLAS CP	Power relay connections	Mounting location GC
		PEGATRON	Revision	0	Station name		Sheet 8.e
			Responsible	A.Yepez	ST 30		Page 76 / 123

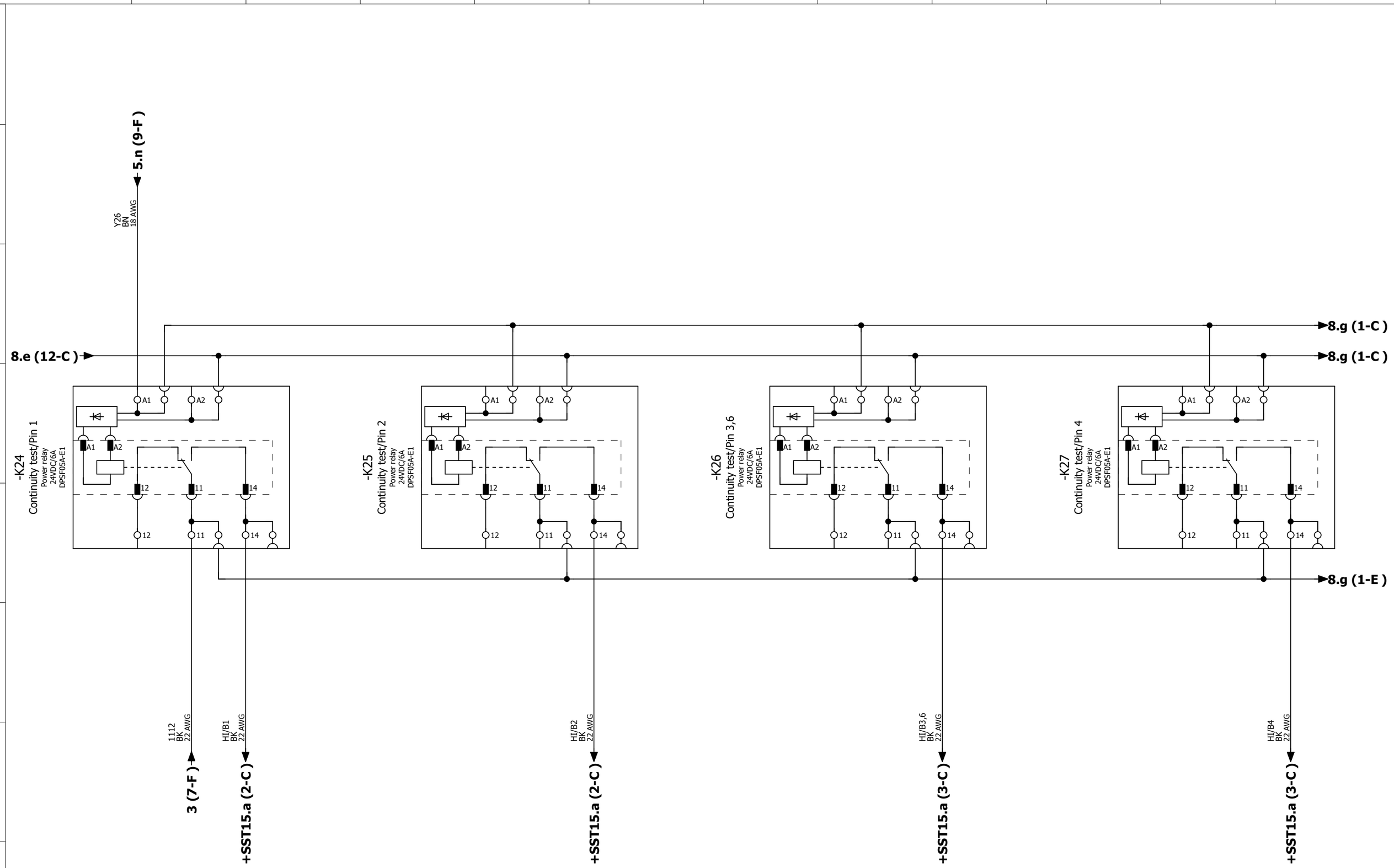

Automatyco®	Automatización, Mantenimiento y Construcción Condominio Industrial Siglo 21, Av. Siglo 21 #50 int #115, Valle de Santa Cruz, CP 45640 Tlajomulco de Zuñiga, Jal, Mex.	O.P. 978	Created	07/01/2026	Project's name	Page name	Facility 24VCD
		Client: Pegatron	Modified	31/03/2026	ATLAS CP	Power relay connections	Mounting location GC
		PEGATRON	Revision	0	Station name		Sheet 8.f
			Responsible	A.Yepez	ST 30		Page 77 / 123

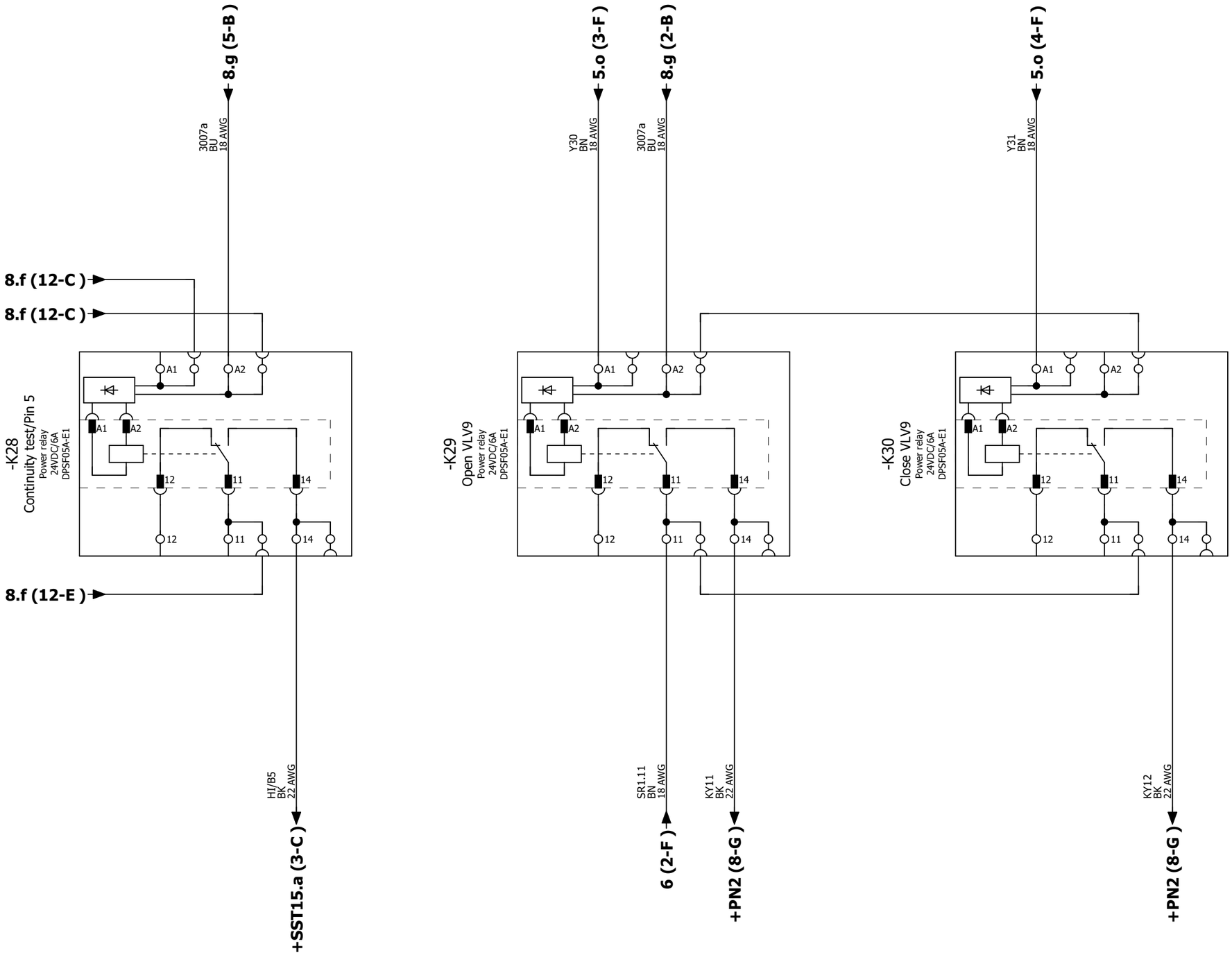

Automatyco®	Automatización, Mantenimiento y Construcción Condominio Industrial Siglo 21, Av. Siglo 21 #50 int #115, Valle de Santa Cruz, CP 45640 Tlajomulco de Zuñiga, Jal, Mex.	O.P. 978	Created	08/01/2026	Project's name	Page name	Facility	24VCD
		Client: Pegatron	Modified	31/03/2026	ATLAS CP	Power relay connections	Mounting location	GC
		PEGATRON	Revision	0	Station name		Sheet	8.g
			Responsible	A.Yepez	ST 30		Page	78 / 123

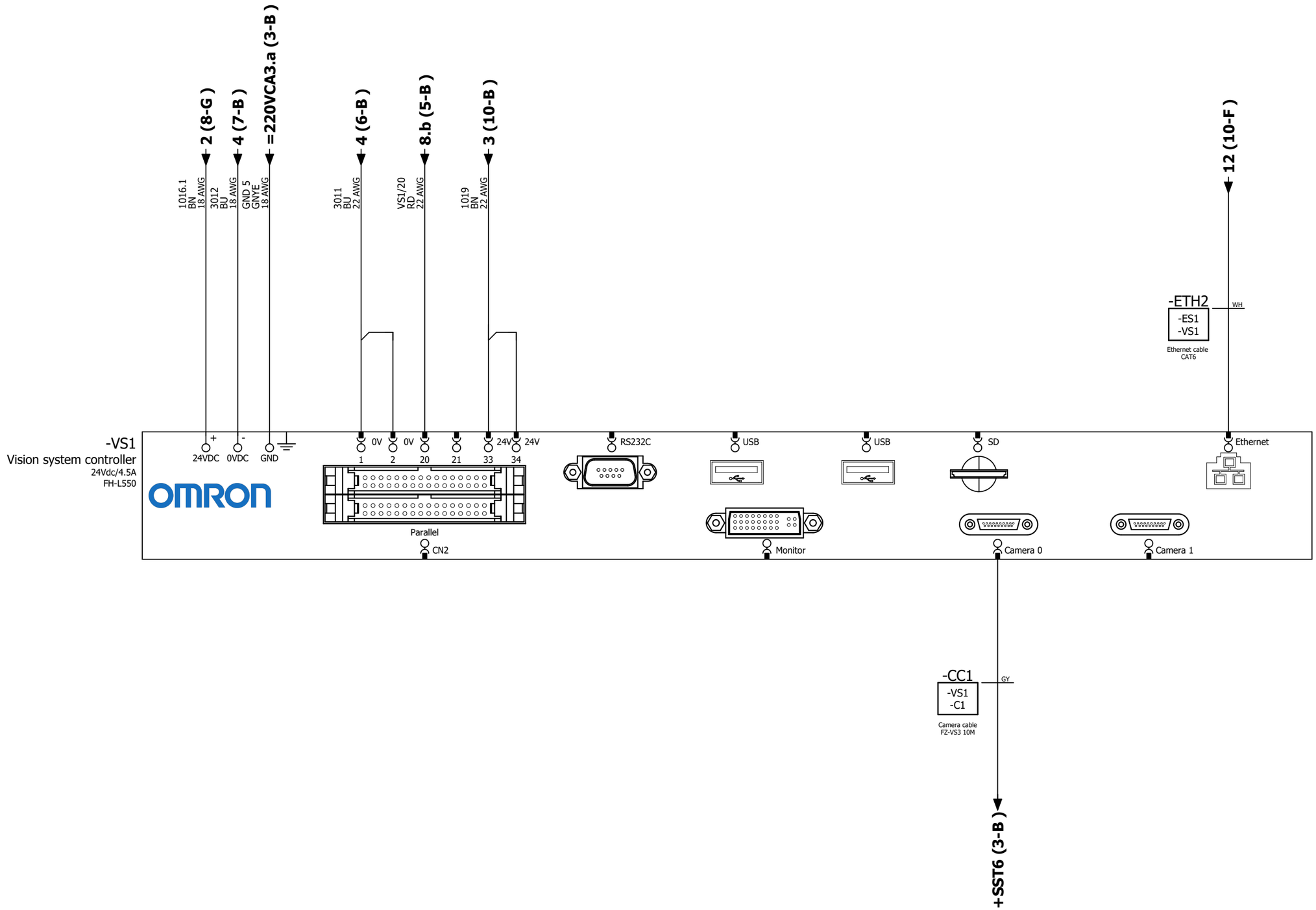

Automatyco®	Automatización, Mantenimiento y Construcción Condominio Industrial Siglo 21, Av. Siglo 21 #50 int #115, Valle de Santa Cruz, CP 45640 Tlajomulco de Zuñiga, Jal, Mex.	O.P. 978	Created	05/01/2026	Project's name	Page name	Facility 24VCD
		Client: Pegatron PEGATRON	Modified	31/03/2026	ATLAS CP	Vision system connections	Mounting location GC
			Revision	0	Station name		Sheet 9
			Responsible	A.Yepez	ST 30		Page 79 / 123

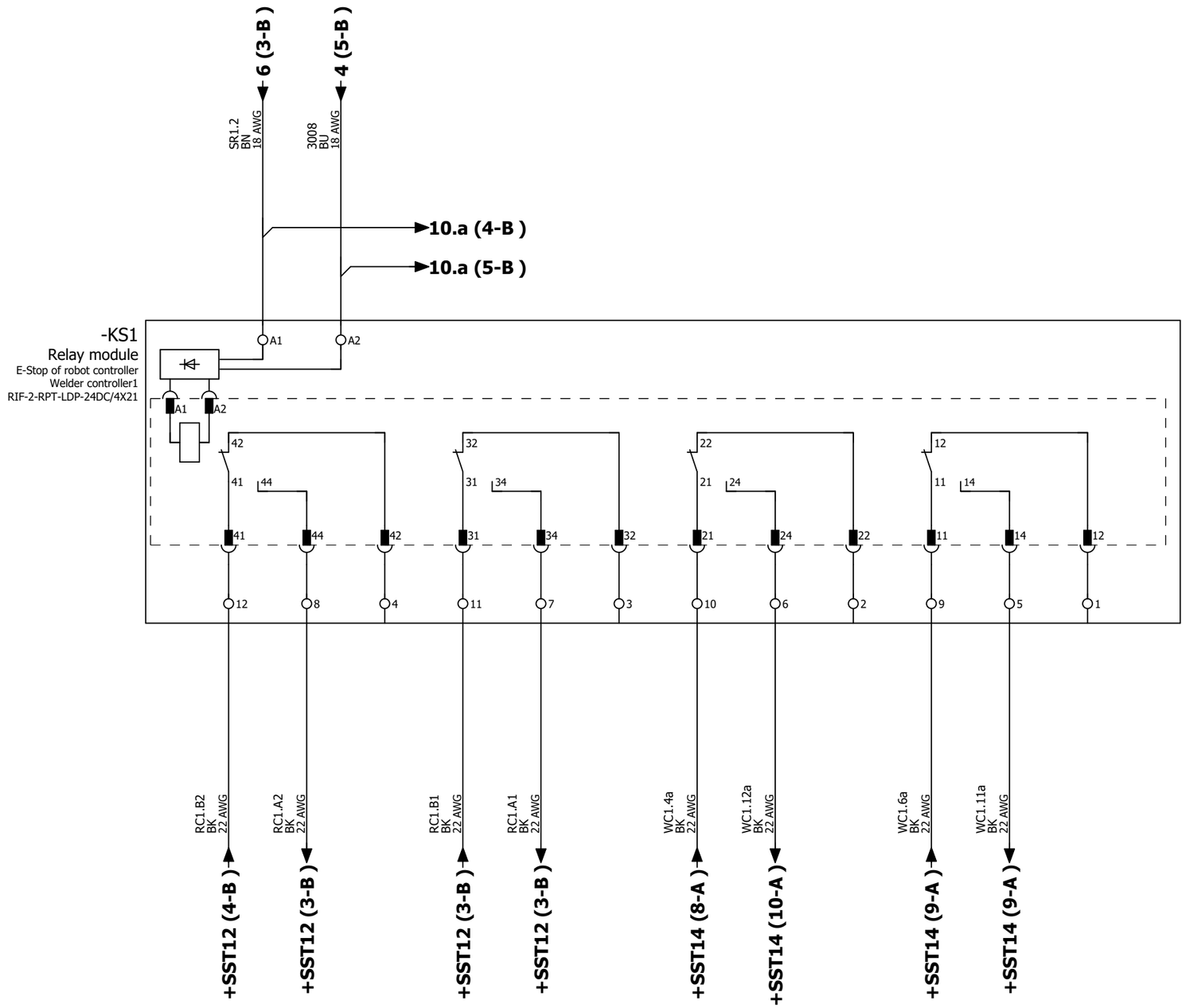

Automatyco®	Automatización, Mantenimiento y Construcción Condominio Industrial Siglo 21, Av. Siglo 21 #50 int #115, Valle de Santa Cruz, CP 45640 Tlajomulco de Zuñiga, Jal, Mex.	O.P. 978	Created	05/01/2026	Project's name	Page name	Facility 24VCD
		Client: Pegatron	Modified	01/06/2026	ATLAS CP	Rele connections KS1	Mounting location GC
		PEGATRON	Revision	0	Station name		Sheet 10
			Responsible	A.Yepez	ST 30		Page 80 / 123

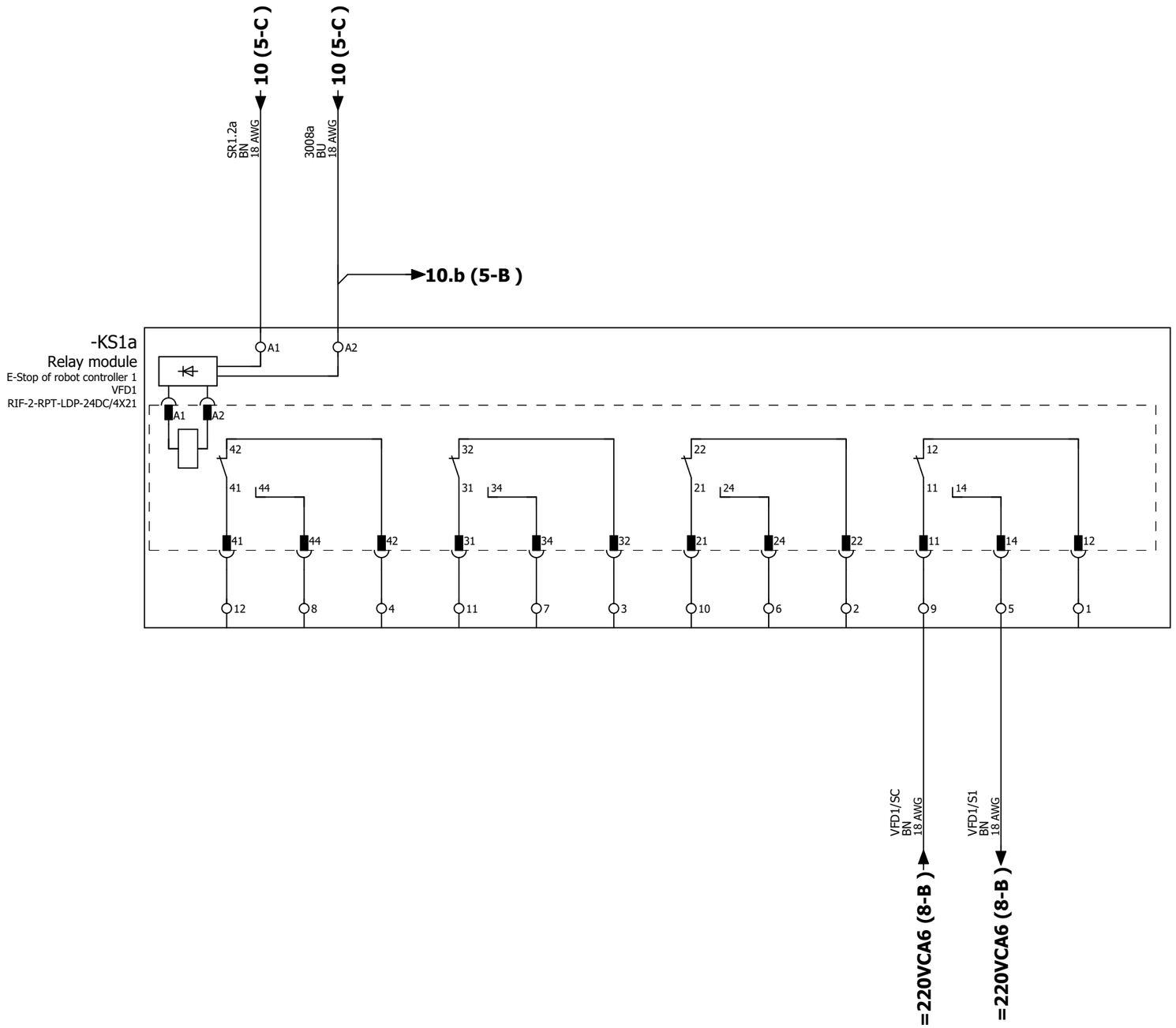

Automatyco®	Automatización, Mantenimiento y Construcción Condominio Industrial Siglo 21, Av. Siglo 21 #50 int #115, Valle de Santa Cruz, CP 45640 Tlajomulco de Zuñiga, Jal, Mex.	O.P. 978	Created	06/01/2026	Project's name	Page name	Facility 24VCD
		Client: Pegatron	Modified	01/06/2026	ATLAS CP	Rele connections KS1a	Mounting location GC
		PEGATRON	Revision	0	Station name		Sheet 10.a
			Responsible	A.Yepez	ST 30		Page 81 / 123

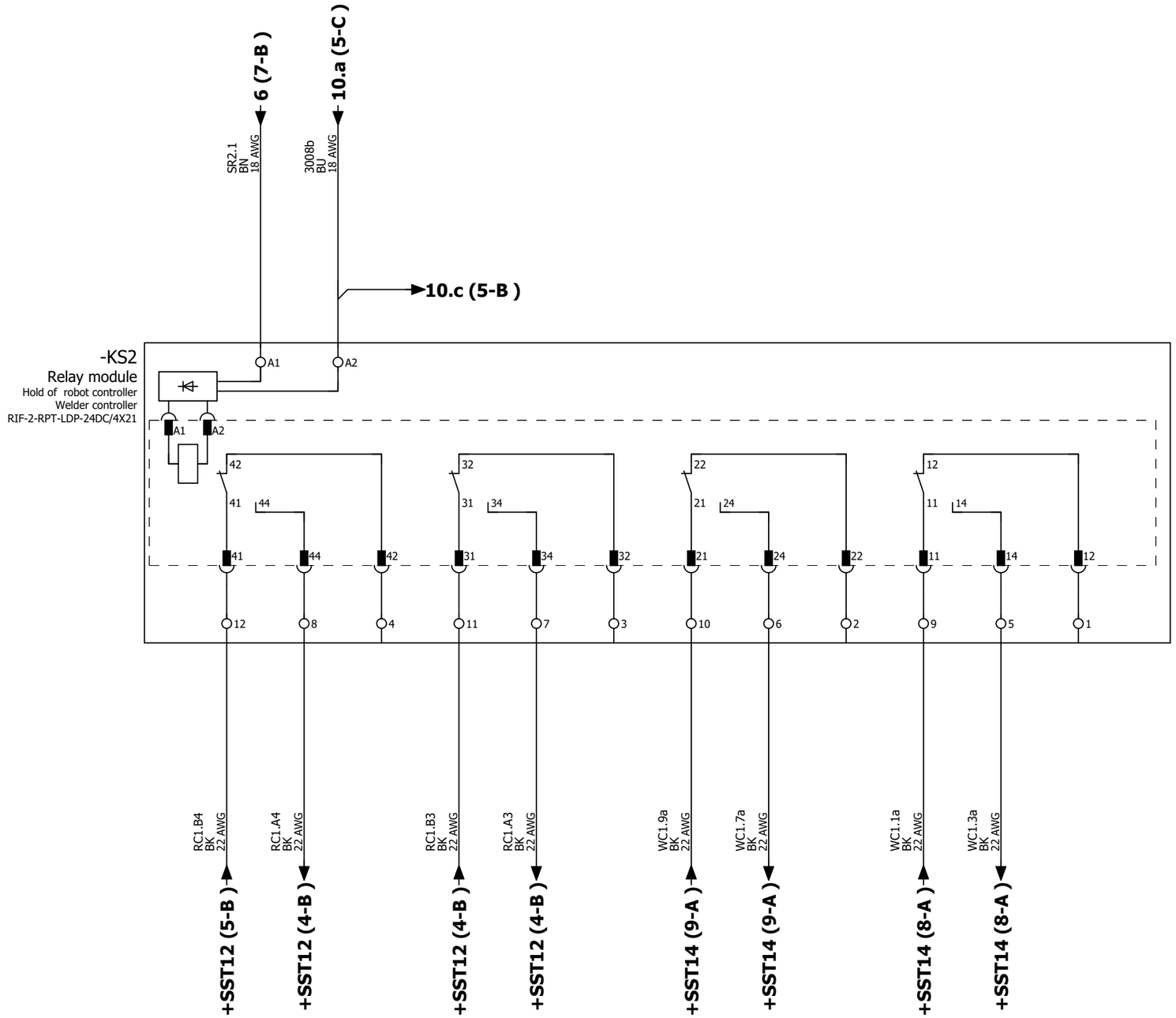

Automatyco®	Automatización, Mantenimiento y Construcción Condominio Industrial Siglo 21, Av. Siglo 21 #50 int #115, Valle de Santa Cruz, CP 45640 Tlajomulco de Zuñiga, Jal, Mex.	O.P. 978	Created	05/01/2026	Project's name	Page name	Facility 24VCD
		Client: Pegatron	Modified	01/06/2026	ATLAS CP	Rele connections KS2	Mounting location GC
		PEGATRON	Revision	0	Station name		Sheet 10.b
			Responsible	A.Yepez	ST 30		Page 82 / 123

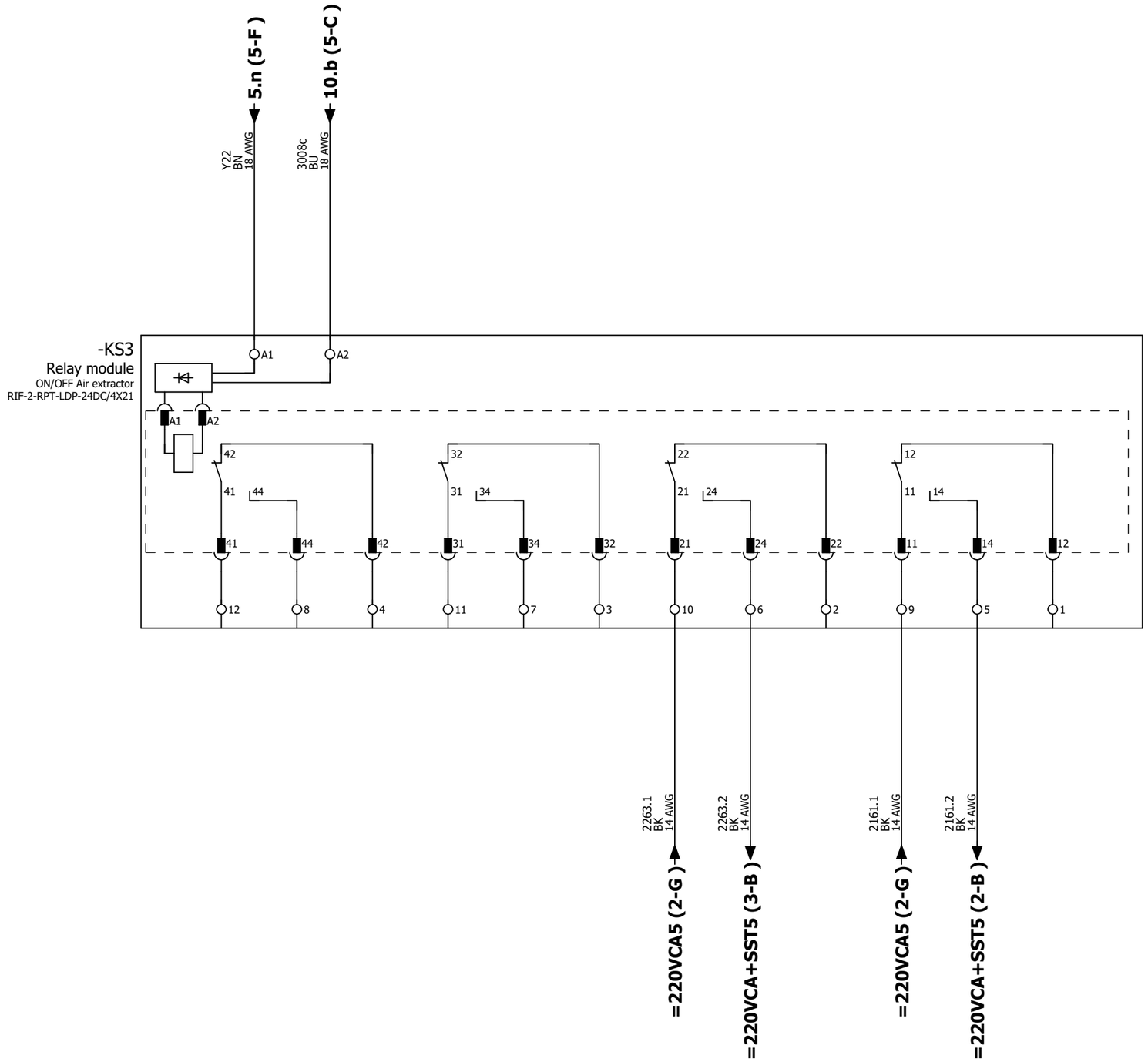
5.n (5-F)
10.b (5-C)
Y22
BN
18 AWG
3008c
BU
18 AWG
-KS3
Relay module
ON/OFF Air extractor
RIF-2-RPT-LDP-24DC/4X21
A1
A2
42
41
44
32
31
34
22
21
24
12
11
14
12
8
4
11
7
3
10
6
2
9
5
1
2263.1
BK
14 AWG
2263.2
BK
14 AWG
2161.1
BK
14 AWG
2161.2
BK
14 AWG
=220VCA5 (2-G)
=220VCA+SST5 (3-B)
=220VCA5 (2-G)
=220VCA+SST5 (2-B)

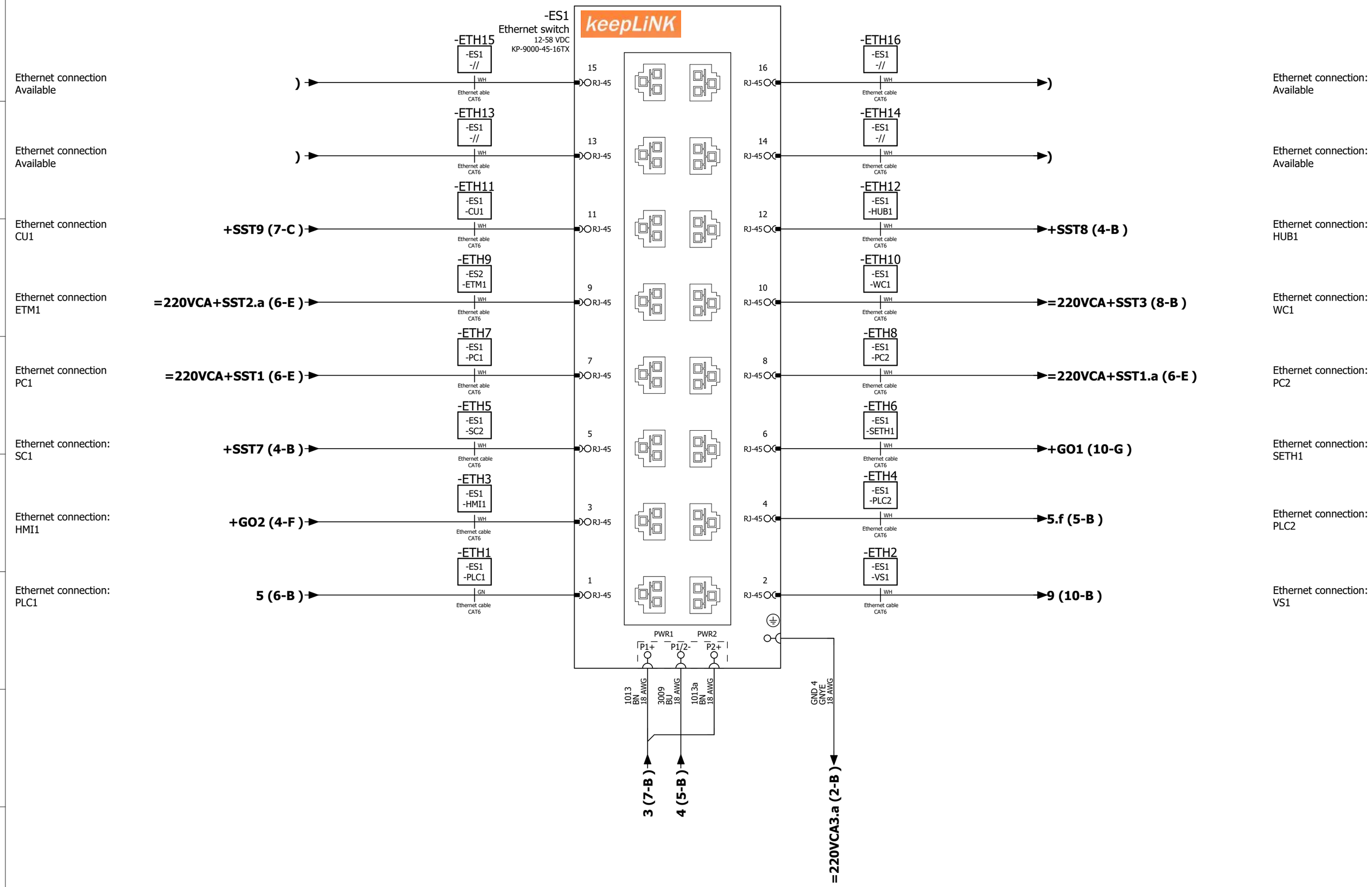

Automatyco®	Automatización, Mantenimiento y Construcción Condominio Industrial Siglo 21, Av. Siglo 21 #50 int #115, Valle de Santa Cruz, CP 45640 Tlajomulco de Zuñiga, Jal, Mex.	O.P. 978	Created	05/01/2026	Project's name	Page name	Facility 24VCD
		Client: Pegatron	Modified	30/03/2026	ATLAS CP	Ethernet switch connections	Mounting location GC
		PEGATRON	Revision	0	Station name		Sheet 12
			Responsible	A.Yepez	ST 30		Page 84 / 123

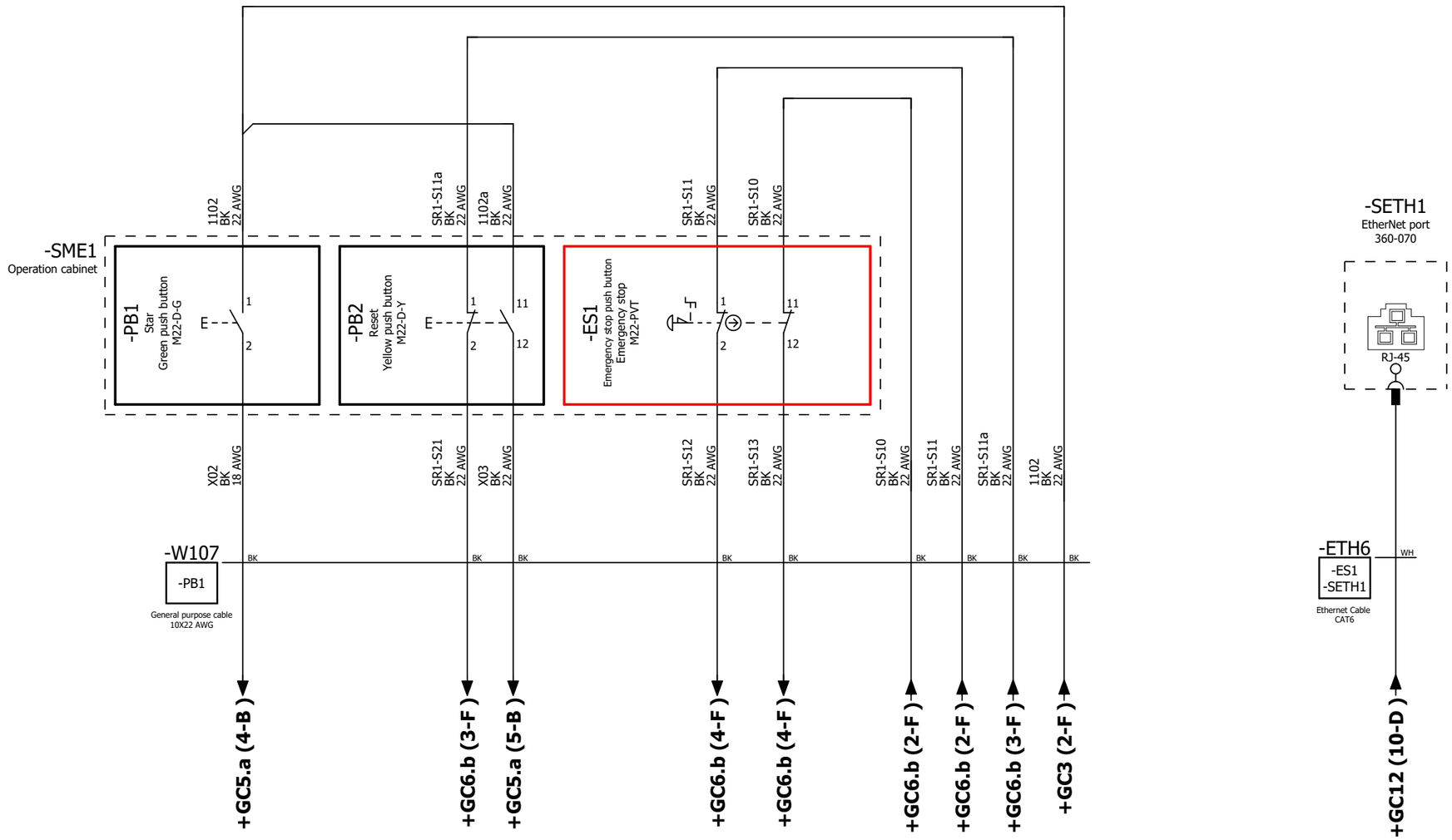

Automatyco®	Automatización, Mantenimiento y Construcción Condominio Industrial Siglo 21, Av. Siglo 21 #50 int #115, Valle de Santa Cruz, CP 45640 Tlajomulco de Zuñiga, Jal, Mex.	O.P. 978	Created 05/01/2026	Project's name ATLAS CP	Page name Buttons	Facility 24VCD	
		Client: Pegatron PEGATRON	Modified 01/06/2026			Mounting location GO	
			Revision 0	Station name ST 30		Sheet 1	
			Responsible A.Yepez			Page 85 / 123	

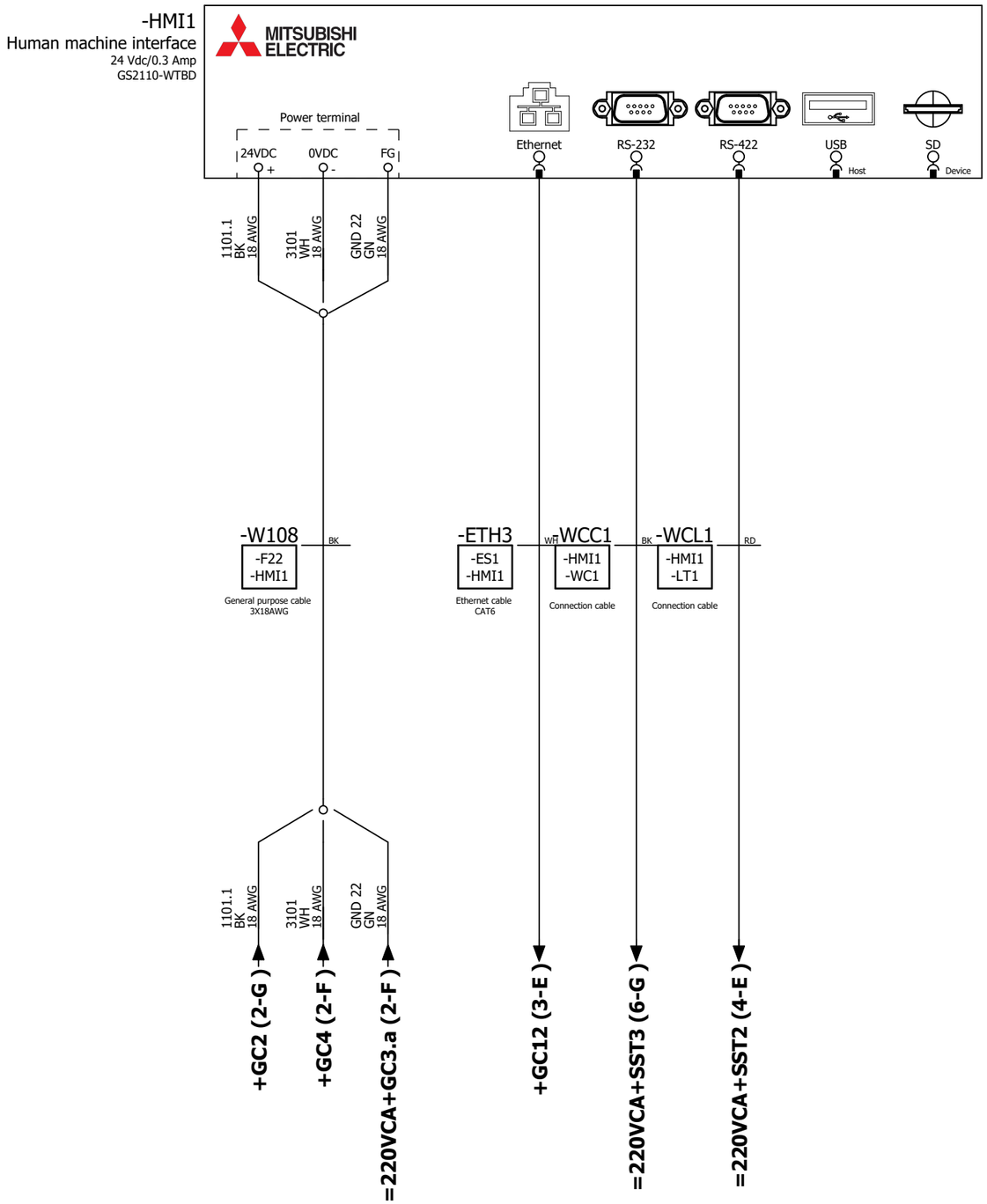
-HMI1
Human machine interface
24 Vdc/0.3 Amp
GS2110-WTBD
MITSUBISHI ELECTRIC
Power terminal
24VDC
0VDC
FG
Ethernet
RS-232
RS-422
USB
Host
SD
Device
1101.1 BK 18 AWG
3101 WH 18 AWG
GND 22 GN 18 AWG
-W108
BK
-F22
-HMI1
General purpose cable 3X18AWG
-ETH3
-ES1
-HMI1
Ethernet cable CAT6
WH
-WCC1
-HMI1
-WC1
Connection cable
BK
-WCL1
-HMI1
-LT1
Connection cable
RD
1101.1 BK 18 AWG
3101 WH 18 AWG
GND 22 GN 18 AWG
+GC2 (2-G)
+GC4 (2-F)
=220VCA+GC3.a (2-F)
+GC12 (3-E)
=220VCA+SST3 (6-G)
=220VCA+SST2 (4-E)

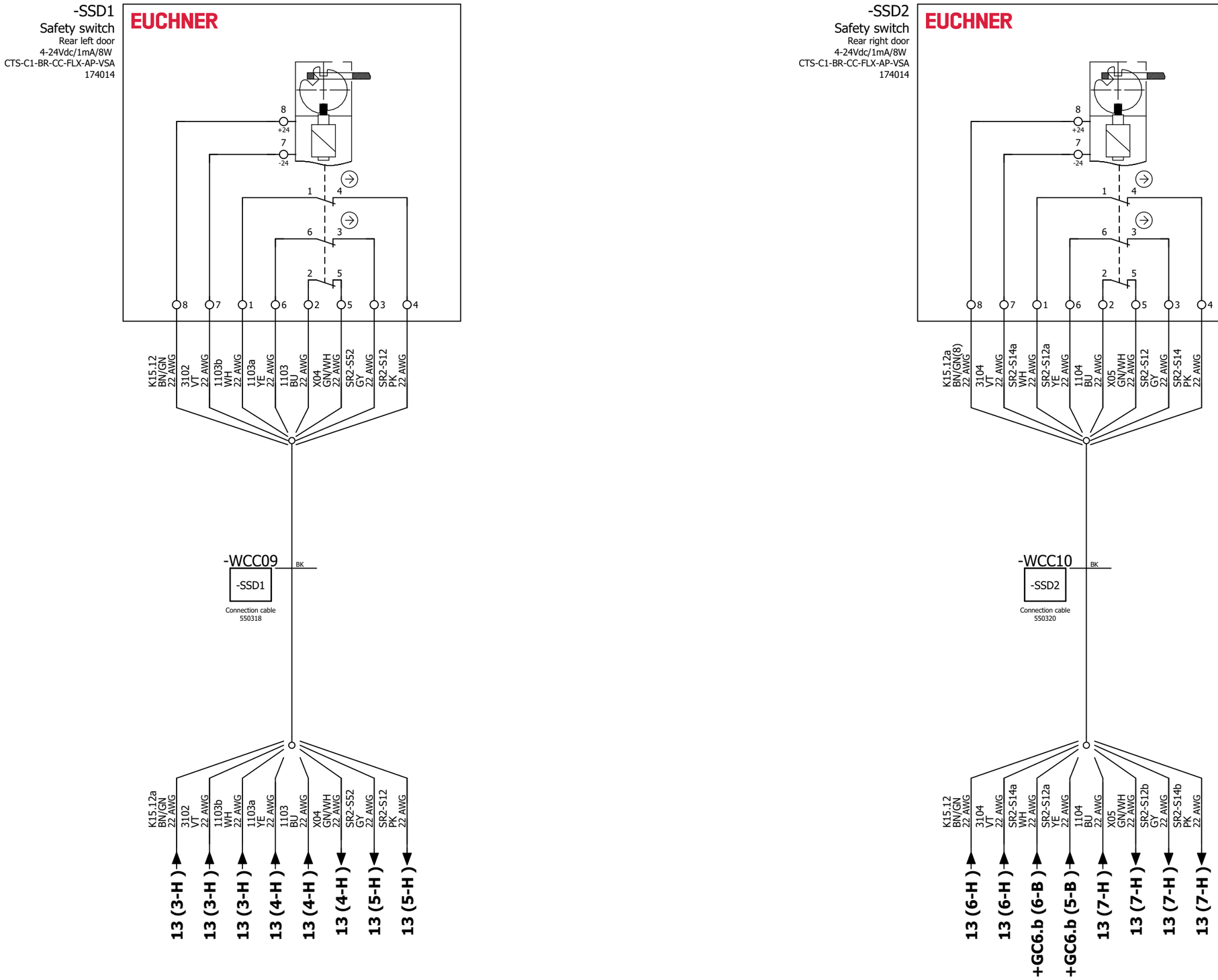

Automatyco®	Automatización, Mantenimiento y Construcción Condominio Industrial Siglo 21, Av. Siglo 21 #50 int #115, Valle de Santa Cruz, CP 45640 Tlajomulco de Zuñiga, Jal, Mex.	O.P. 978	Created	05/01/2026	Project's name	Page name	Facility 24VCD
		Client: Pegatron	Modified	01/06/2026	ATLAS CP	Interlock connections	Mounting location SST
		PEGATRON	Revision	0	Station name		Sheet 1
			Responsible	A.Yepez	ST 30		Page 87 / 123

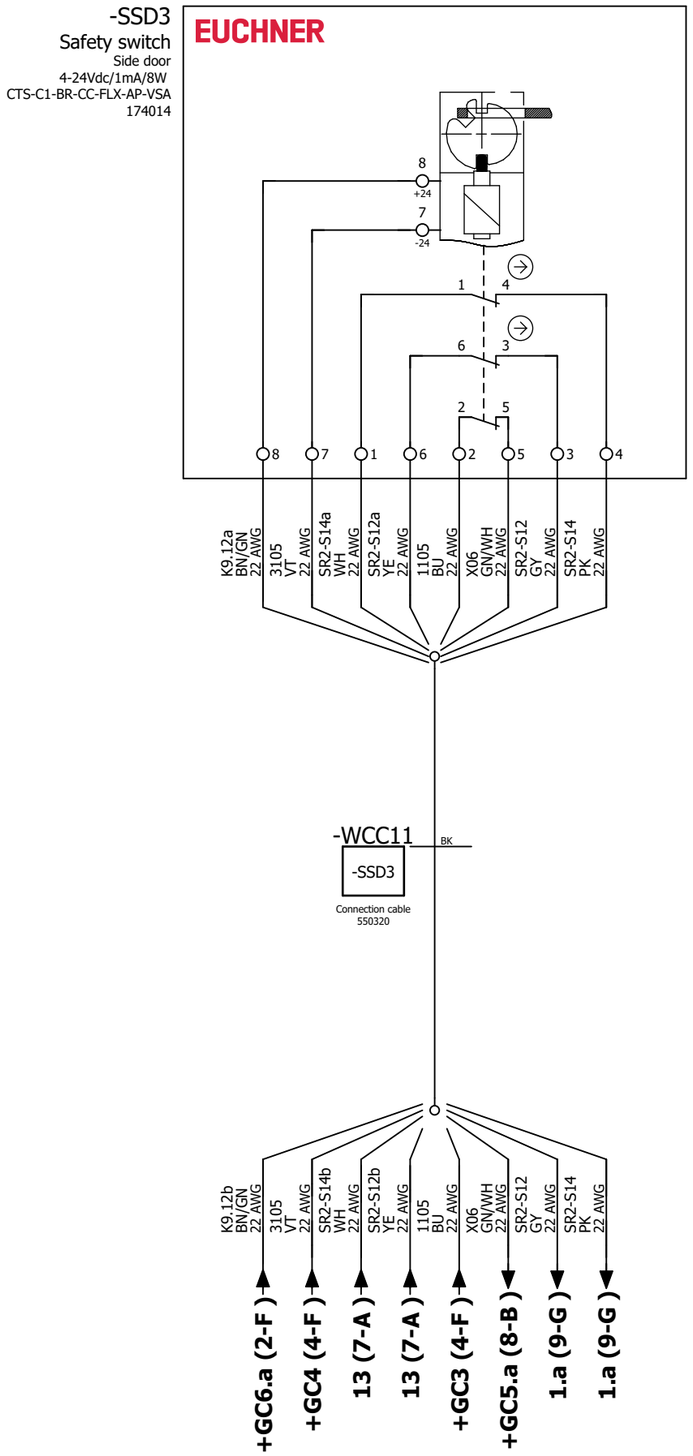
-SSD3
Safety switch
Side door
4-24Vdc/1mA/8W
CTS-C1-BR-CC-FLX-AP-VSA
174014
EUCHNER
8
+24
7
-24
1
4
6
3
2
5
8 7 1 6 2 5 3 4
K9.12a BN/GN 22 AWG
3105 VT 22 AWG
SR2-S14a WH 22 AWG
SR2-S12a YE 22 AWG
1105 BU 22 AWG
X06 GN/WH 22 AWG
SR2-S12 GY 22 AWG
SR2-S14 PK 22 AWG
-WCC11
BK
-SSD3
Connection cable
550320
K9.12b BN/GN 22 AWG
3105 VT 22 AWG
SR2-S14b WH 22 AWG
SR2-S12b YE 22 AWG
1105 BU 22 AWG
X06 GN/WH 22 AWG
SR2-S12 GY 22 AWG
SR2-S14 PK 22 AWG
+GC6.a (2-F)
+GC4 (4-F)
13 (7-A)
13 (7-A)
+GC3 (4-F)
+GC5.a (8-B)
1.a (9-G)
1.a (9-G)

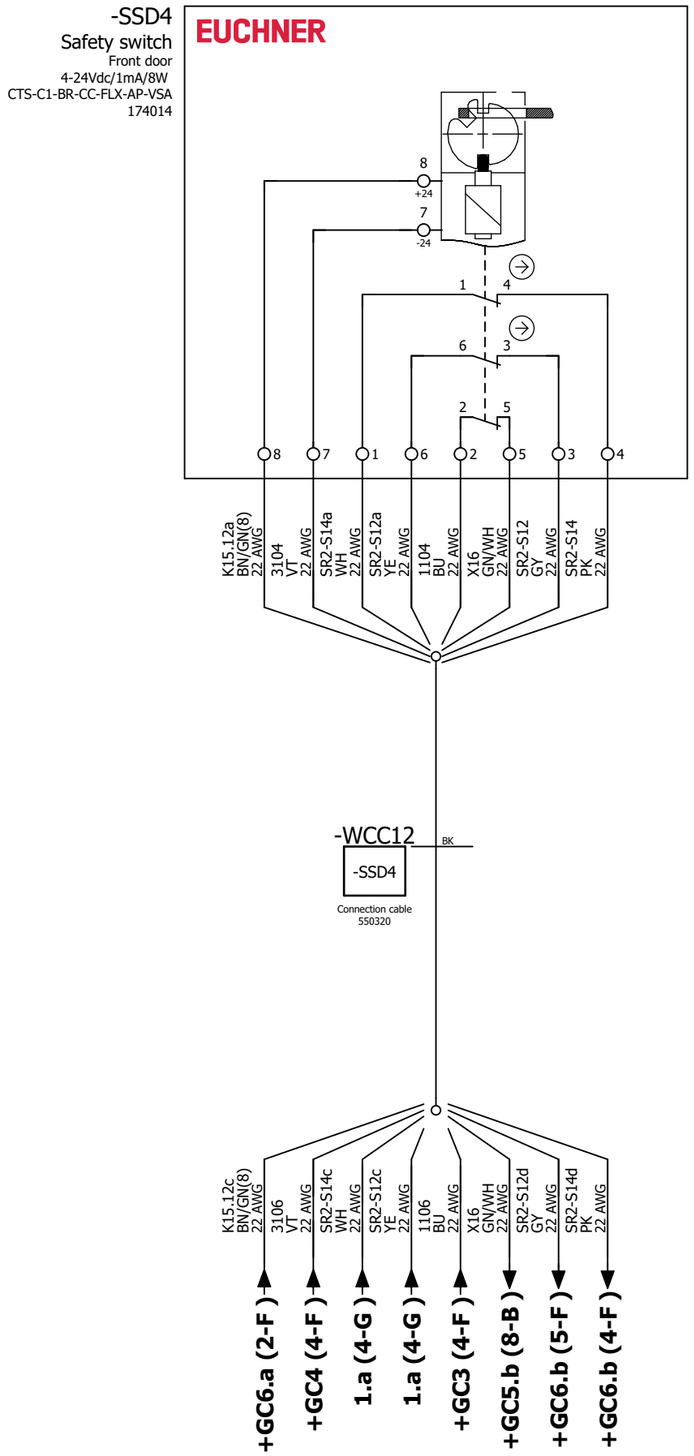
-SSD4
Safety switch
Front door
4-24Vdc/1mA/8W
CTS-C1-BR-CC-FLX-AP-VSA
174014
EUCHNER
8
+24
7
-24
1
4
6
3
2
5
8 7 1 6 2 5 3 4
K15.12a BN/GN(8) 22 AWG
3104 VT 22 AWG
SR2-S14a WH 22 AWG
SR2-S12a YE 22 AWG
1104 BU 22 AWG
X16 GN/WH 22 AWG
SR2-S12 GY 22 AWG
SR2-S14 PK 22 AWG
-WCC12
BK
-SSD4
Connection cable
550320
K15.12c BN/GN(8) 22 AWG
3106 VT 22 AWG
SR2-S14c WH 22 AWG
SR2-S12c YE 22 AWG
1106 BU 22 AWG
X16 GN/WH 22 AWG
SR2-S12d GY 22 AWG
SR2-S14d PK 22 AWG
+GC6.a (2-F)
+GC4 (4-F)
1.a (4-G)
1.a (4-G)
+GC3 (4-F)
+GC5.b (8-B)
+GC6.b (5-F)
+GC6.b (4-F)

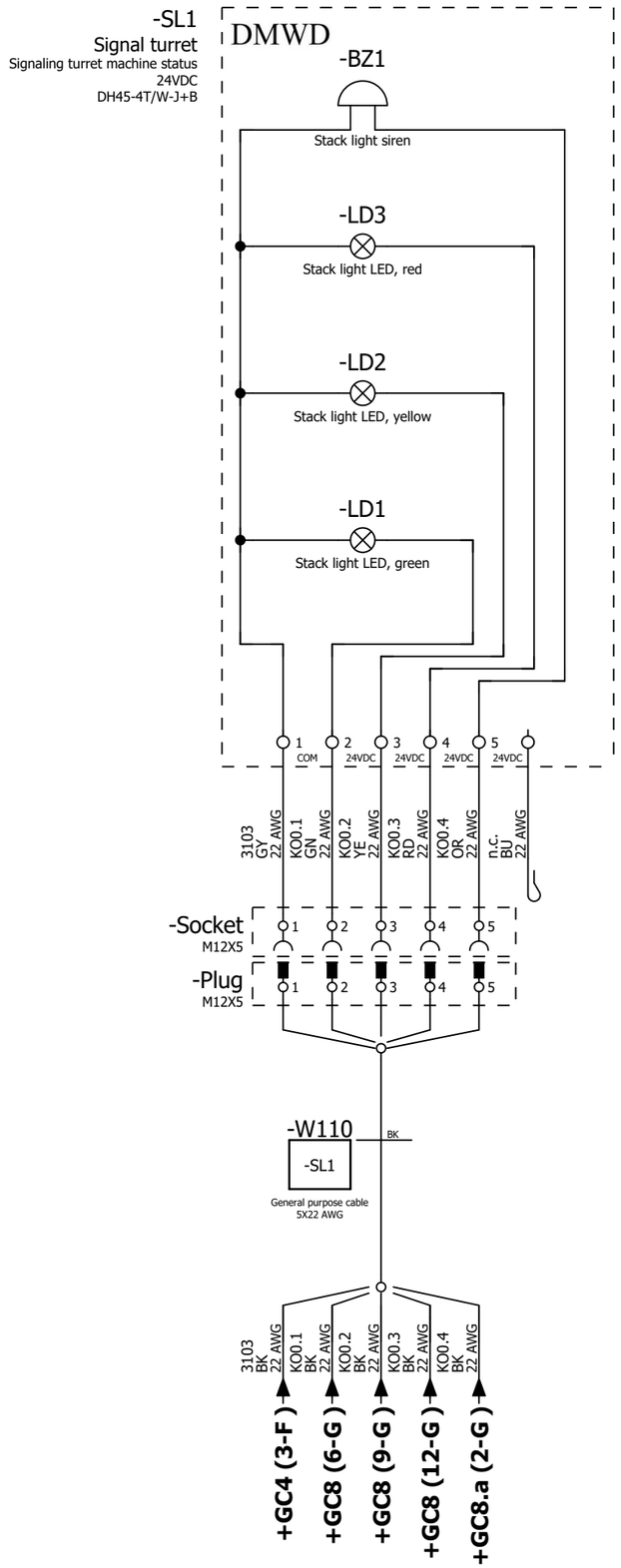
-SL1
Signal turret
Signaling turret machine status
24VDC
DH45-4T/W-J+B
DMWD
-BZ1
Stack light siren
-LD3
Stack light LED, red
-LD2
Stack light LED, yellow
-LD1
Stack light LED, green
1 COM
2 24VDC
3 24VDC
4 24VDC
5 24VDC
3103 GY 22 AWG
K00.1 GN 22 AWG
K00.2 YE 22 AWG
K00.3 RD 22 AWG
K00.4 OR 22 AWG
n.c. BU 22 AWG
-Socket
M12X5
-Plug
M12X5
-W110
BK
-SL1
General purpose cable
5X22 AWG
3103 BK 22 AWG
K00.1 BK 22 AWG
K00.2 BK 22 AWG
K00.3 BK 22 AWG
K00.4 BK 22 AWG
+GC4 (3-F)
+GC8 (6-G)
+GC8 (9-G)
+GC8 (12-G)
+GC8.a (2-G)

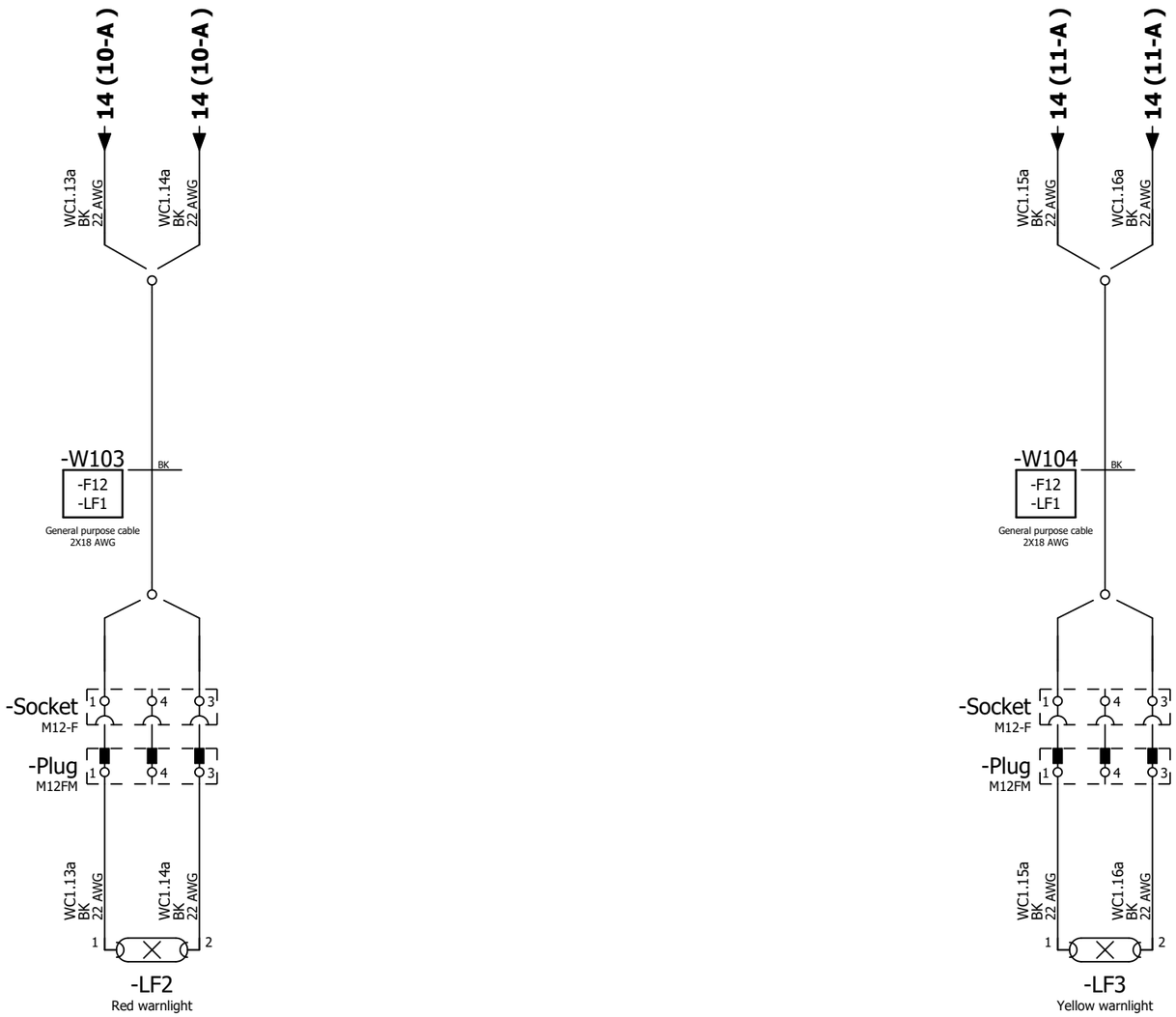

Automatyco® Automatización, Mantenimiento y Construcción Condominio Industrial Siglo 21, Av. Siglo 21 #50 int #115, Valle de Santa Cruz, CP 45640 Tlajomulco de Zuñiga, Jal, Mex.	O.P. 978	Created	05/01/2026	Project's name	Page name
	Client: Pegatron PEGATRON	Modified	05/01/2026	ATLAS CP	Warnlight connections
		Revision	0	Station name	
		Responsible	A.Yepez	ST 30	

Facility	24VCD
Mounting location	SST
Sheet	5
Page	90 / 123

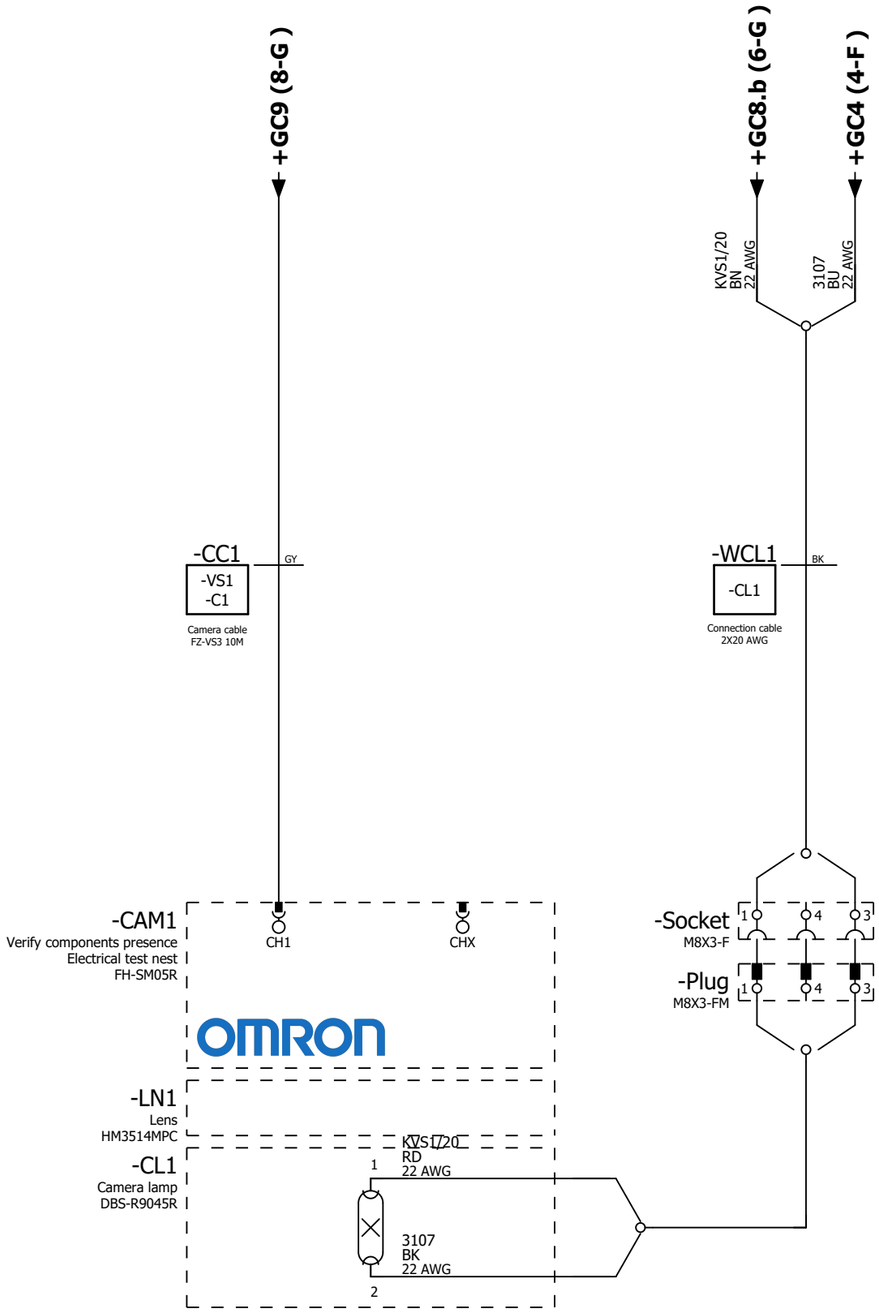

Automatyco®

Automatización,
Mantenimiento y Construcción
Condominio Industrial Siglo 21,
Av. Siglo 21 #50 int #115,
Valle de Santa Cruz, CP 45640
Tlajomulco de Zuñiga, Jal, Mex.

O.P. 978	Created	05/01/2026	Project's name	Page name	Facility 24VCD
Client: Pegatron	Modified	31/03/2026	ATLAS CP	Camera connections	Mounting location SST
PEGATRON	Revision	0	Station name		Sheet 6
	Responsible	A.Yepez	ST 30		Page 91 / 123

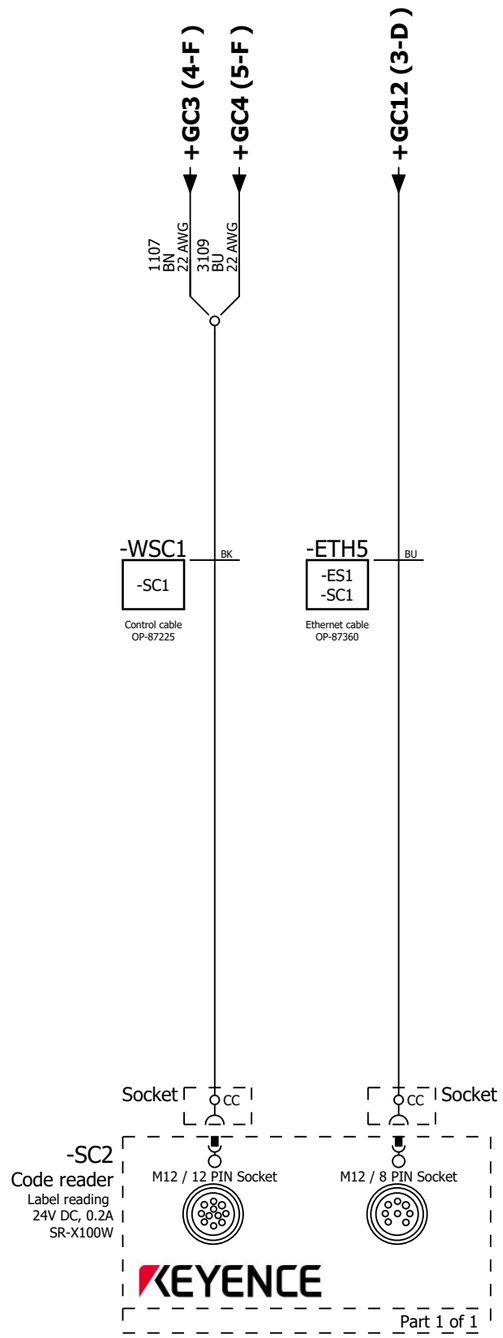
+GC3 (4-F)
+GC4 (5-F)
+GC12 (3-D)
1107
BN
22 AWG
3109
BU
22 AWG
-WSC1
BK
-SC1
Control cable
OP-87225
-ETH5
BU
-ES1
-SC1
Ethernet cable
OP-87360
Socket
CC
CC
Socket
-SC2
Code reader
Label reading
24V DC, 0.2A
SR-X100W
M12 / 12 PIN Socket
M12 / 8 PIN Socket
KEYENCE
Part 1 of 1

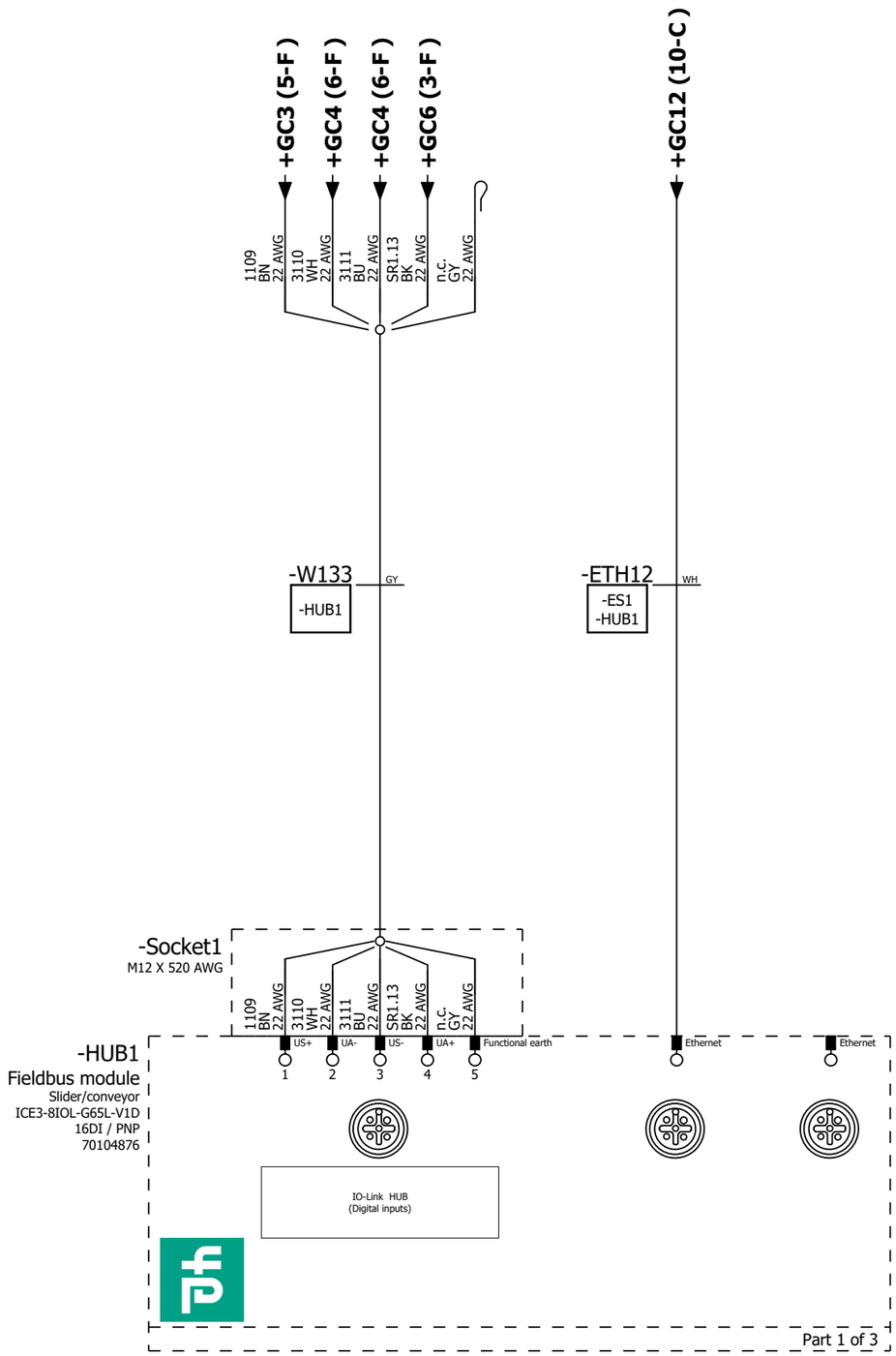
+GC3 (5-F)
+GC4 (6-F)
+GC4 (6-F)
+GC6 (3-F)
+GC12 (10-C)
1109 BN 22 AWG
3110 WH 22 AWG
3111 BU 22 AWG
SR1.13 BK 22 AWG
n.c. GY 22 AWG
-W133
GY
-HUB1
-ETH12
WH
-ES1
-HUB1
-Socket1
M12 X 520 AWG
1109 BN 22 AWG
3110 WH 22 AWG
3111 BU 22 AWG
SR1.13 BK 22 AWG
n.c. GY 22 AWG
-HUB1
Fieldbus module
Slider/conveyor
ICE3-8IOL-G65L-V1D
16DI / PNP
70104876
US+
UA-
US-
UA+
Functional earth
Ethernet
Ethernet
1
2
3
4
5
IO-Link HUB
(Digital inputs)
Part 1 of 3

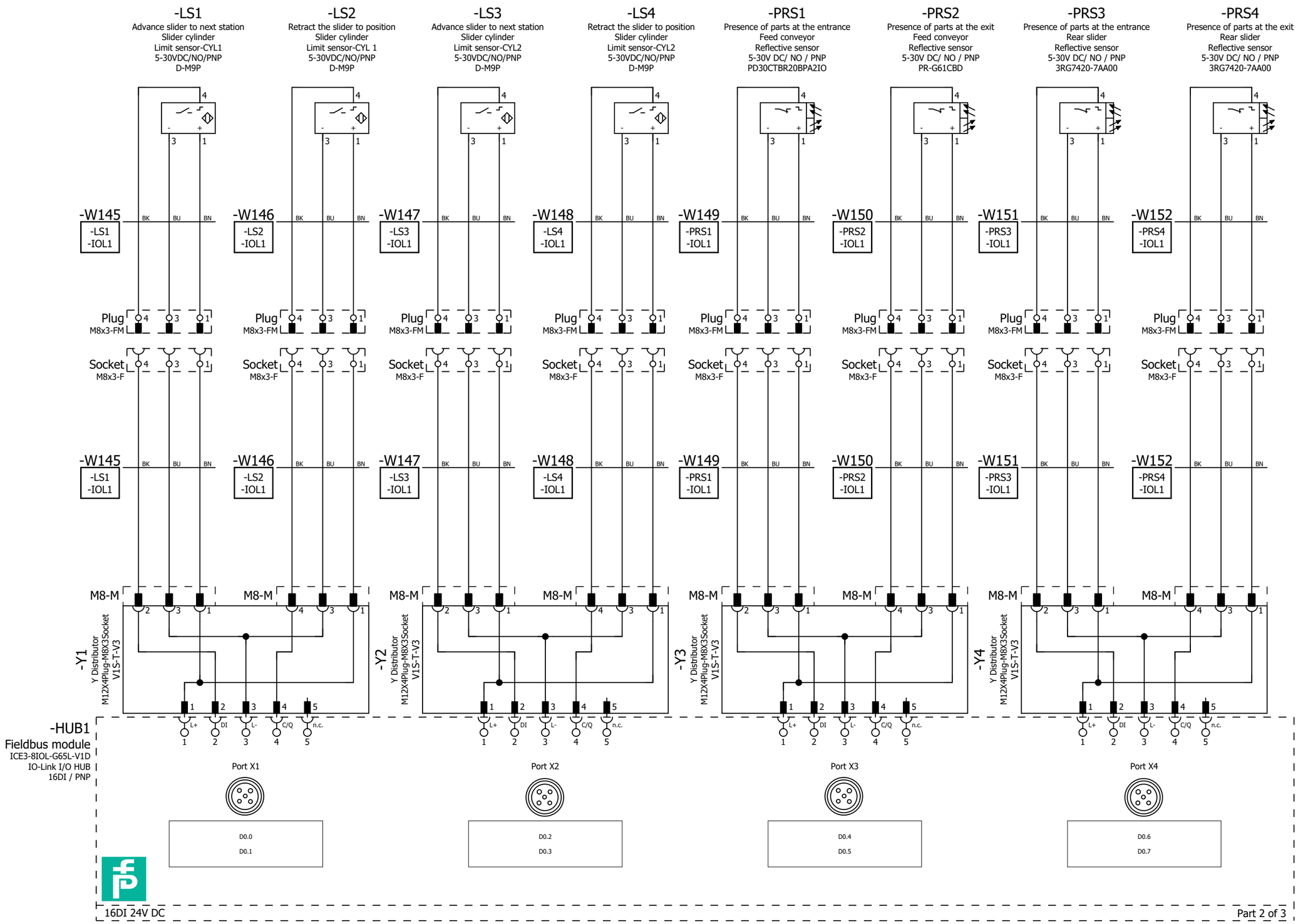
-LS1
Advance slider to next station
Slider cylinder
Limit sensor-CYL1
5-30VDC/NO/PNP
D-M9P
-LS2
Retract the slider to position
Slider cylinder
Limit sensor-CYL 1
5-30VDC/NO/PNP
D-M9P
-LS3
Advance slider to next station
Slider cylinder
Limit sensor-CYL2
5-30VDC/NO/PNP
D-M9P
-LS4
Retract the slider to position
Slider cylinder
Limit sensor-CYL2
5-30VDC/NO/PNP
D-M9P
-PRS1
Presence of parts at the entrance
Feed conveyor
Reflective sensor
5-30V DC/ NO / PNP
PD30CTBR20BPA2IO
-PRS2
Presence of parts at the exit
Feed conveyor
Reflective sensor
5-30V DC/ NO / PNP
PR-G61CBD
-PRS3
Presence of parts at the entrance
Rear slider
Reflective sensor
5-30V DC/ NO / PNP
3RG7420-7AA00
-PRS4
Presence of parts at the exit
Rear slider
Reflective sensor
5-30V DC/ NO / PNP
3RG7420-7AA00
-W145
-W146
-W147
-W148
-W149
-W150
-W151
-W152
BK
BU
BN
-LS1 -IOL1
-LS2 -IOL1
-LS3 -IOL1
-LS4 -IOL1
-PRS1 -IOL1
-PRS2 -IOL1
-PRS3 -IOL1
-PRS4 -IOL1
Plug
M8x3-FM
Socket
M8x3-F
M8-M
-Y1
-Y2
-Y3
-Y4
Y Distributor
M12X4Plug-M8X3Socket
V1S-T-V3
L+
DI
L-
C/Q
n.c.
-HUB1
Fieldbus module
ICE3-8IOL-G65L-V1D
IO-Link I/O HUB
16DI / PNP
Port X1
Port X2
Port X3
Port X4
D0.0
D0.1
D0.2
D0.3
D0.4
D0.5
D0.6
D0.7
16DI 24V DC
Part 2 of 3

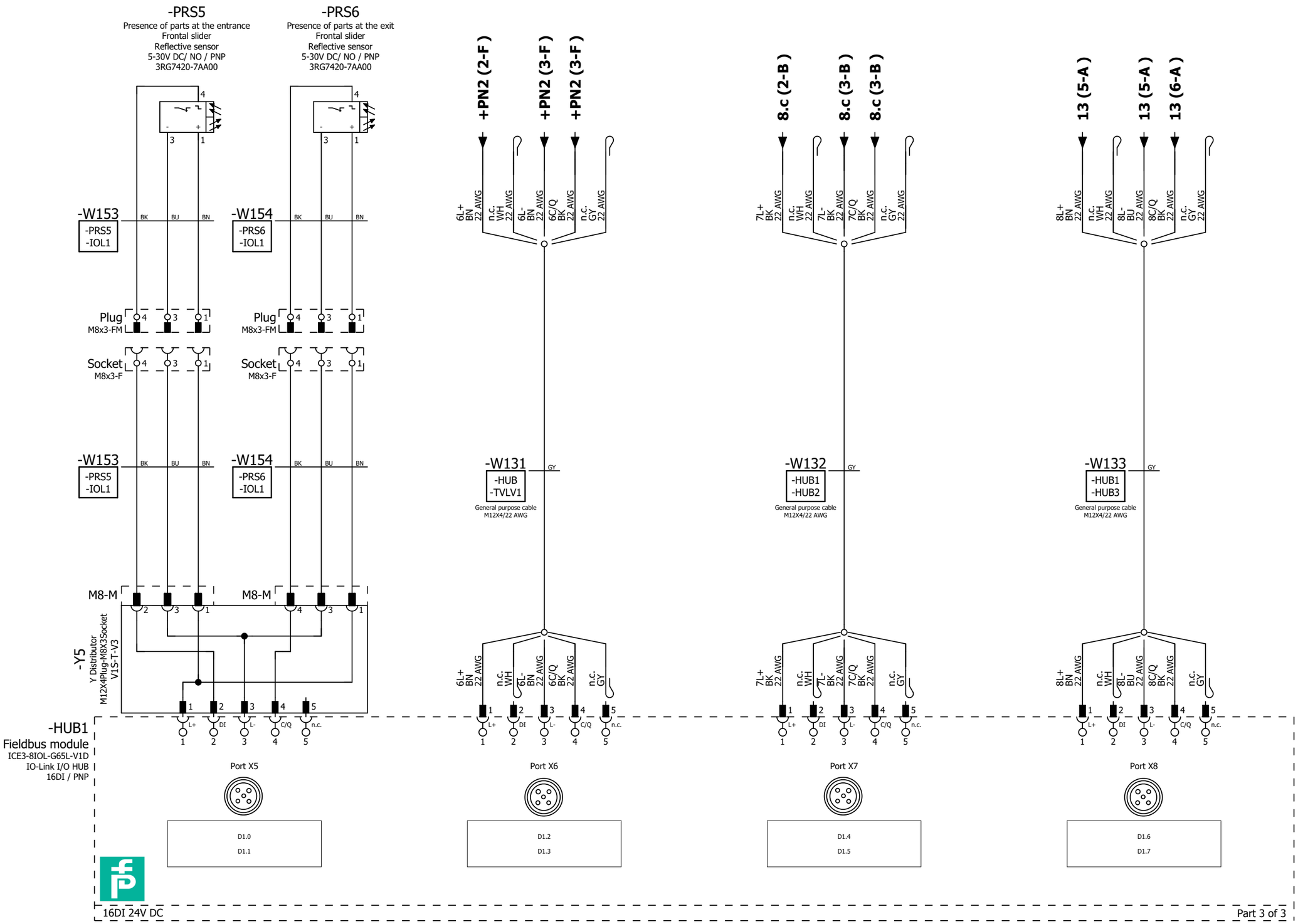

Automatyco®	Automatización, Mantenimiento y Construcción Condominio Industrial Siglo 21, Av. Siglo 21 #50 int #115, Valle de Santa Cruz, CP 45640 Tlajomulco de Zuñiga, Jal, Mex.	O.P. 978	Created	05/01/2026	Project's name	Page name	Facility 24VCD
		Client: Pegatron	Modified	01/06/2026	ATLAS CP	IO-Link I/O Hub 1	Mounting location SST
		PEGATRON	Revision	0	Station name		Sheet 8.b
			Responsible	A.Yepez	ST 30		Page 95 / 123

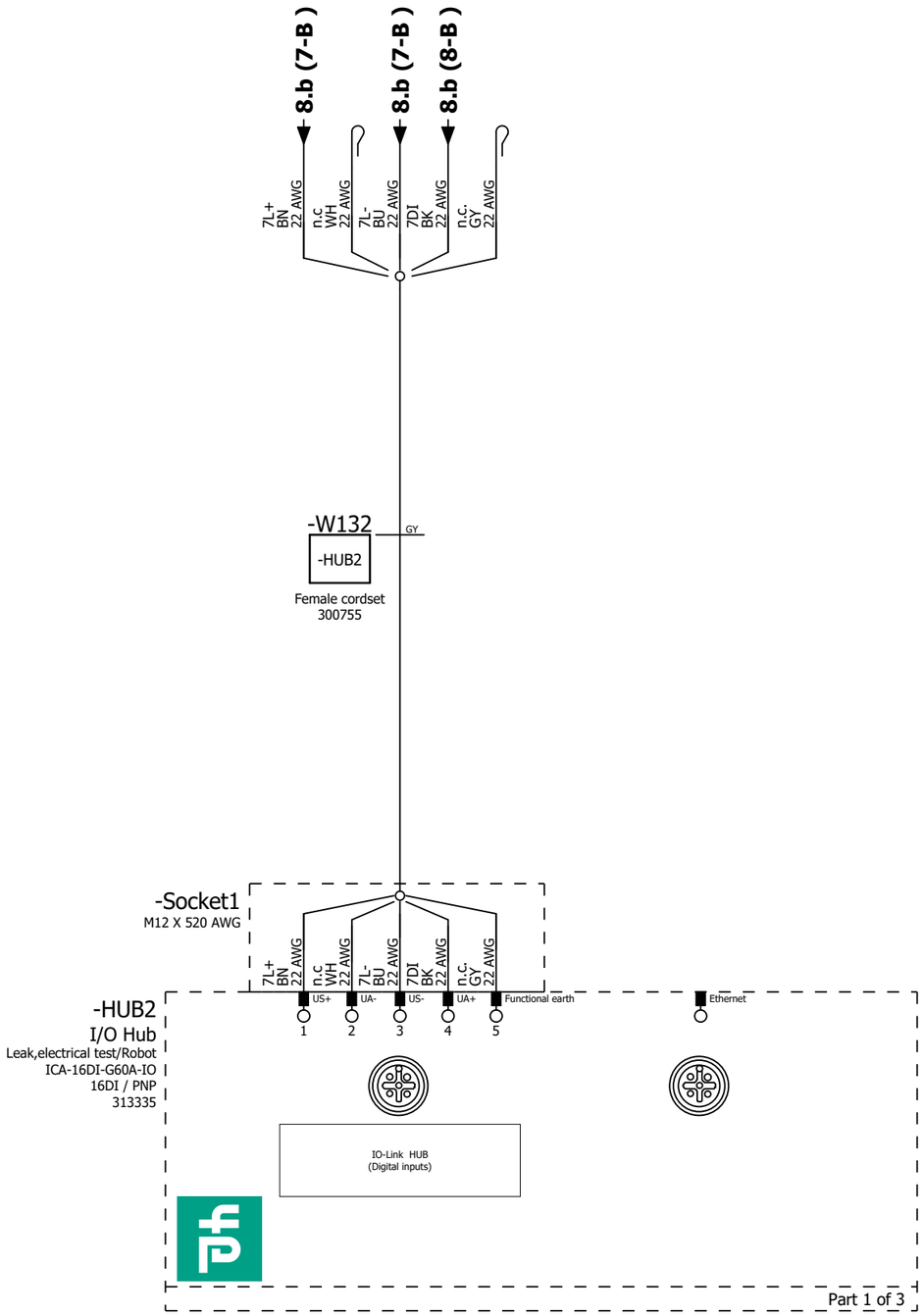
8.b (7-B)
8.b (7-B)
8.b (8-B)
7L+
BN
22 AWG
n.c
WH
22 AWG
7L-
BU
22 AWG
7DI
BK
22 AWG
n.c.
GY
22 AWG
-W132
GY
-HUB2
Female cordset
300755
-Socket1
M12 X 520 AWG
US+
UA-
US-
UA+
Functional earth
Ethernet
1
2
3
4
5
-HUB2
I/O Hub
Leak,electrical test/Robot
ICA-16DI-G60A-IO
16DI / PNP
313335
IO-Link HUB
(Digital inputs)
Part 1 of 3

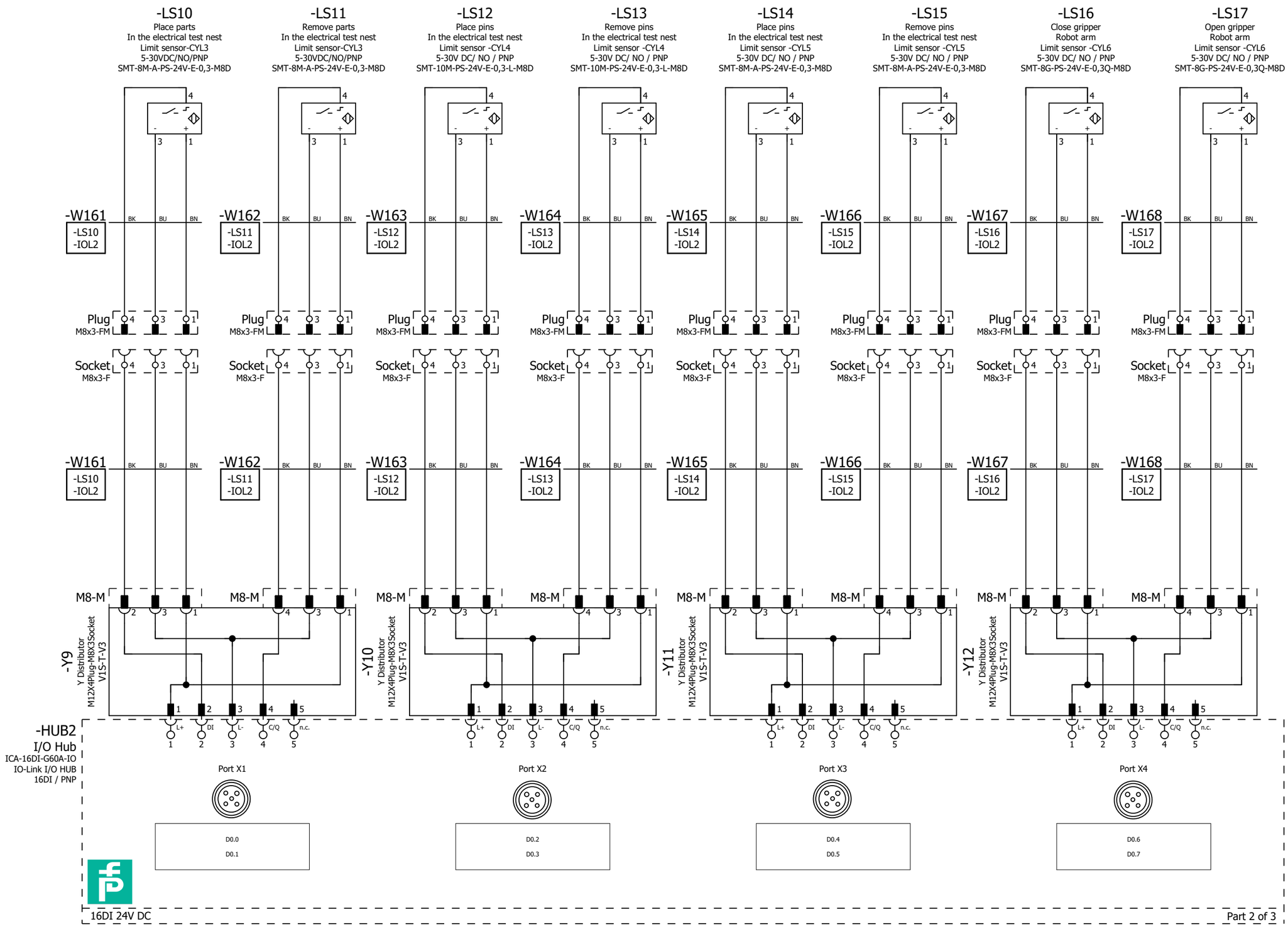
-LS10
Place parts
In the electrical test nest
Limit sensor-CYL3
5-30VDC/NO/PNP
SMT-8M-A-PS-24V-E-0,3-M8D
-LS11
Remove parts
In the electrical test nest
Limit sensor-CYL3
5-30VDC/NO/PNP
SMT-8M-A-PS-24V-E-0,3-M8D
-LS12
Place pins
In the electrical test nest
Limit sensor -CYL4
5-30V DC/ NO / PNP
SMT-10M-PS-24V-E-0,3-L-M8D
-LS13
Remove pins
In the electrical test nest
Limit sensor -CYL4
5-30V DC/ NO / PNP
SMT-10M-PS-24V-E-0,3-L-M8D
-LS14
Place pins
In the electrical test nest
Limit sensor -CYL5
5-30V DC/ NO / PNP
SMT-8M-A-PS-24V-E-0,3-M8D
-LS15
Remove pins
In the electrical test nest
Limit sensor -CYL5
5-30V DC/ NO / PNP
SMT-8M-A-PS-24V-E-0,3-M8D
-LS16
Close gripper
Robot arm
Limit sensor -CYL6
5-30V DC/ NO / PNP
SMT-8G-PS-24V-E-0,3Q-M8D
-LS17
Open gripper
Robot arm
Limit sensor -CYL6
5-30V DC/ NO / PNP
SMT-8G-PS-24V-E-0,3Q-M8D
-W161
-W162
-W163
-W164
-W165
-W166
-W167
-W168
-LS10 -IOL2
-LS11 -IOL2
-LS12 -IOL2
-LS13 -IOL2
-LS14 -IOL2
-LS15 -IOL2
-LS16 -IOL2
-LS17 -IOL2
BK
BU
BN
Plug
M8x3-FM
Socket
M8x3-F
M8-M
-Y9
-Y10
-Y11
-Y12
Y Distributor
M12X4Plug-M8X3Socket
V1S-T-V3
L+
DI
L-
C/Q
n.c.
-HUB2
I/O Hub
ICA-16DI-G60A-IO
IO-Link I/O HUB
16DI / PNP
Port X1
Port X2
Port X3
Port X4
D0.0
D0.1
D0.2
D0.3
D0.4
D0.5
D0.6
D0.7
16DI 24V DC
Part 2 of 3

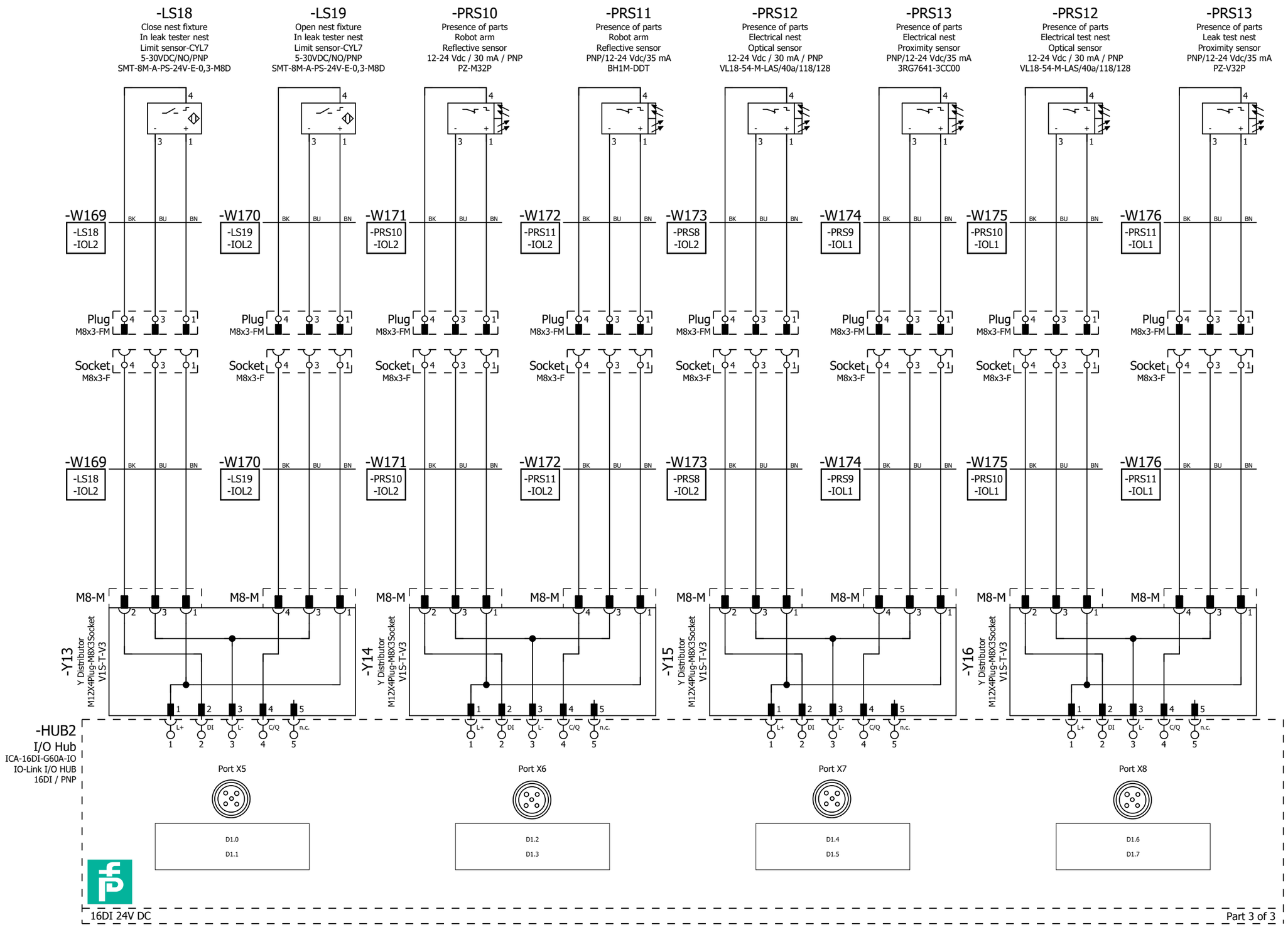

Automatyco®	Automatización, Mantenimiento y Construcción Condominio Industrial Siglo 21, Av. Siglo 21 #50 int #115, Valle de Santa Cruz, CP 45640 Tlajomulco de Zuñiga, Jal, Mex.	O.P. 978	Created	05/01/2026	Project's name	Page name	Facility 24VCD
		Client: Pegatron	Modified	01/06/2026	ATLAS CP	IO-Link I/O Hub 2	Mounting location SST
		PEGATRON	Revision	0	Station name		Sheet 8.e
			Responsible	A.Yepez	ST 30		Page 98 / 123

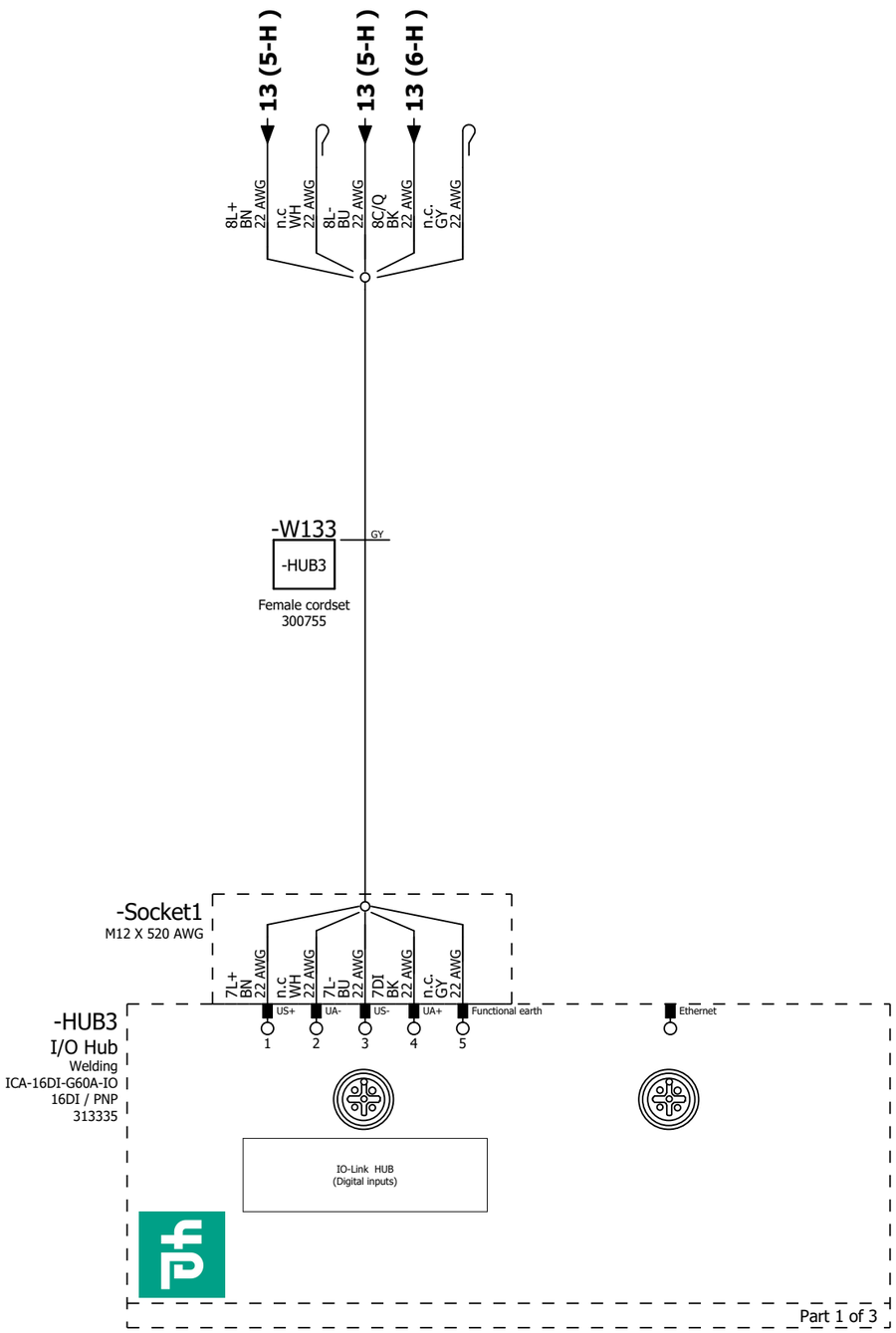

Automatyco®	Automatización, Mantenimiento y Construcción Condominio Industrial Siglo 21, Av. Siglo 21 #50 int #115, Valle de Santa Cruz, CP 45640 Tlajomulco de Zuñiga, Jal, Mex.	O.P. 978	Created	06/01/2026	Project's name	Page name
		Client: Pegatron	Modified	16/02/2026	ATLAS CP	IO-Link I/O Hub 3
		PEGATRON	Revision	0	Station name	
			Responsible	A.Yepez	ST 30	

Facility	24VCD
Mounting location	SST
Sheet	8.f
Page	99 / 123

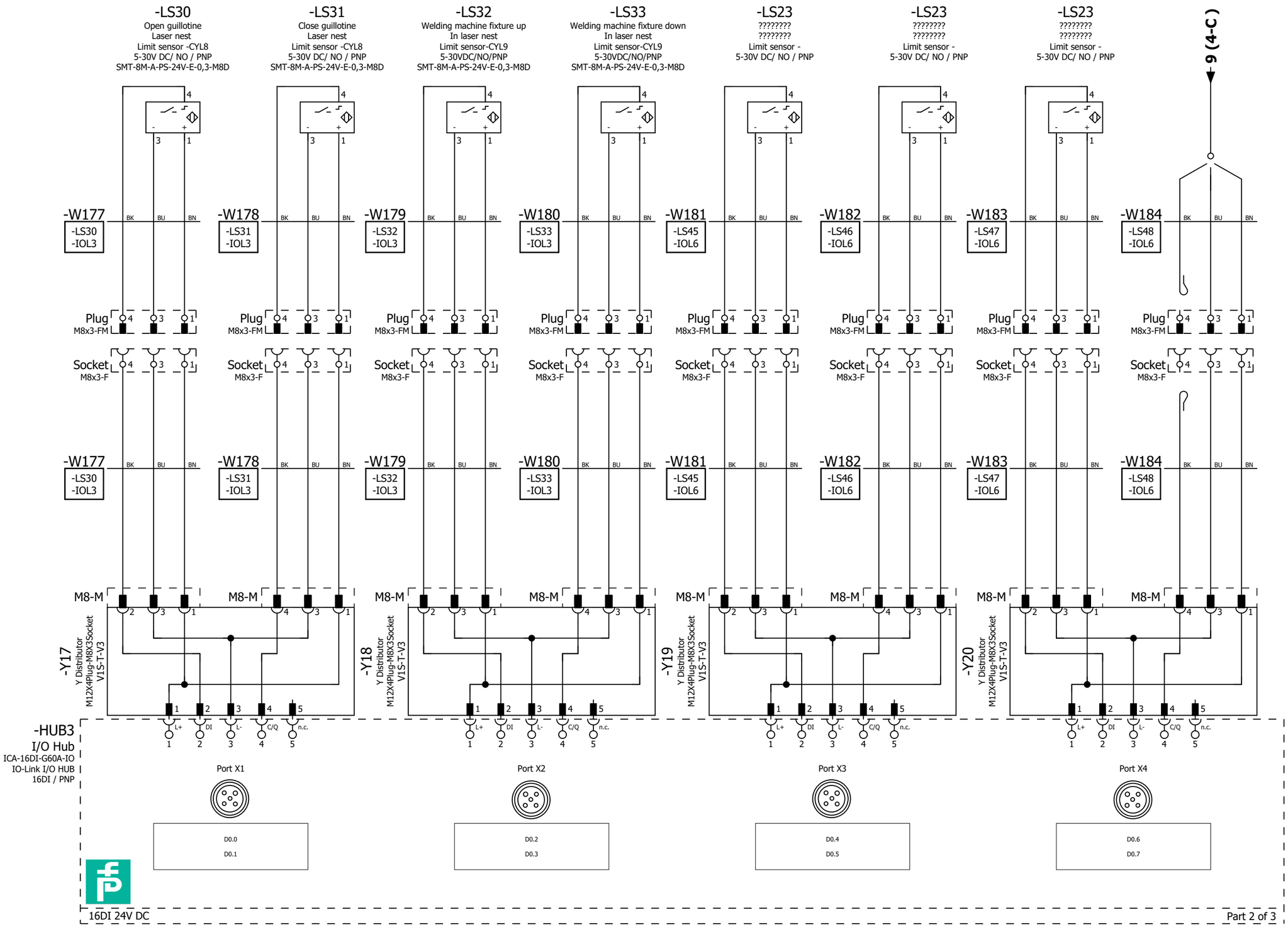

Automatyco®	Automatización, Mantenimiento y Construcción Condominio Industrial Siglo 21, Av. Siglo 21 #50 int #115, Valle de Santa Cruz, CP 45640 Tlajomulco de Zuñiga, Jal, Mex.	O.P. 978	Created	06/01/2026	Project's name	Page name	Facility 24VCD
		Client: Pegatron	Modified	01/06/2026	ATLAS CP	IO-Link I/O Hub 3	Mounting location SST
		PEGATRON	Revision	0	Station name		Sheet 8.g
			Responsible	A.Yepez	ST 30		Page 100 / 123

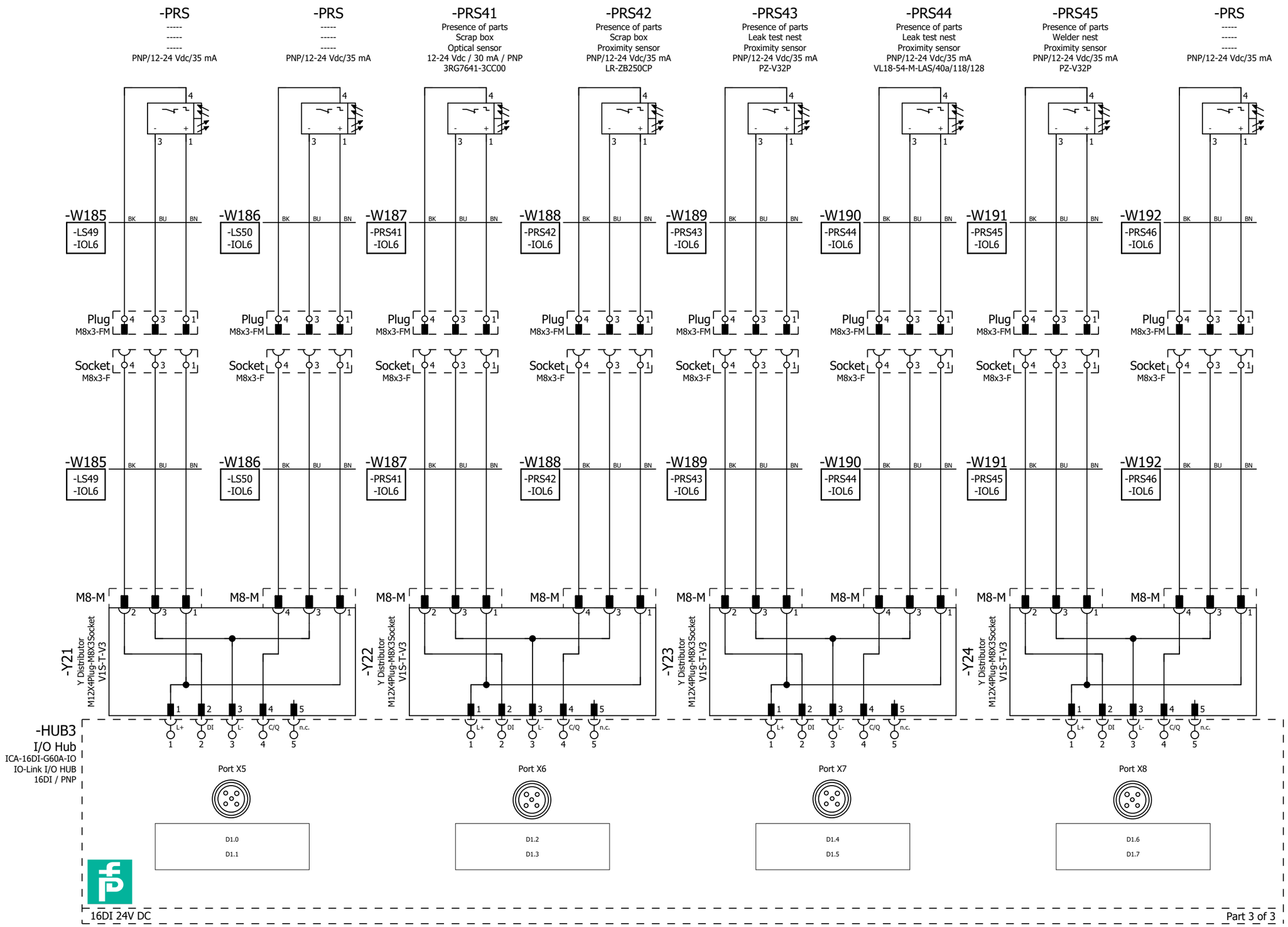

Automatyco® Automatización, Mantenimiento y Construcción Condominio Industrial Siglo 21, Av. Siglo 21 #50 int #115, Valle de Santa Cruz, CP 45640 Tlajomulco de Zuñiga, Jal, Mex.	O.P. 978	Created	06/01/2026	Project's name	Page name
	Client: Pegatron	Modified	01/06/2026	ATLAS CP	IO-Link I/O Hub 3
	PEGATRON	Revision	0	Station name	
		Responsible	A.Yepez	ST 30	

Facility	24VCD
Mounting location	SST
Sheet	8.h
Page	101 / 123

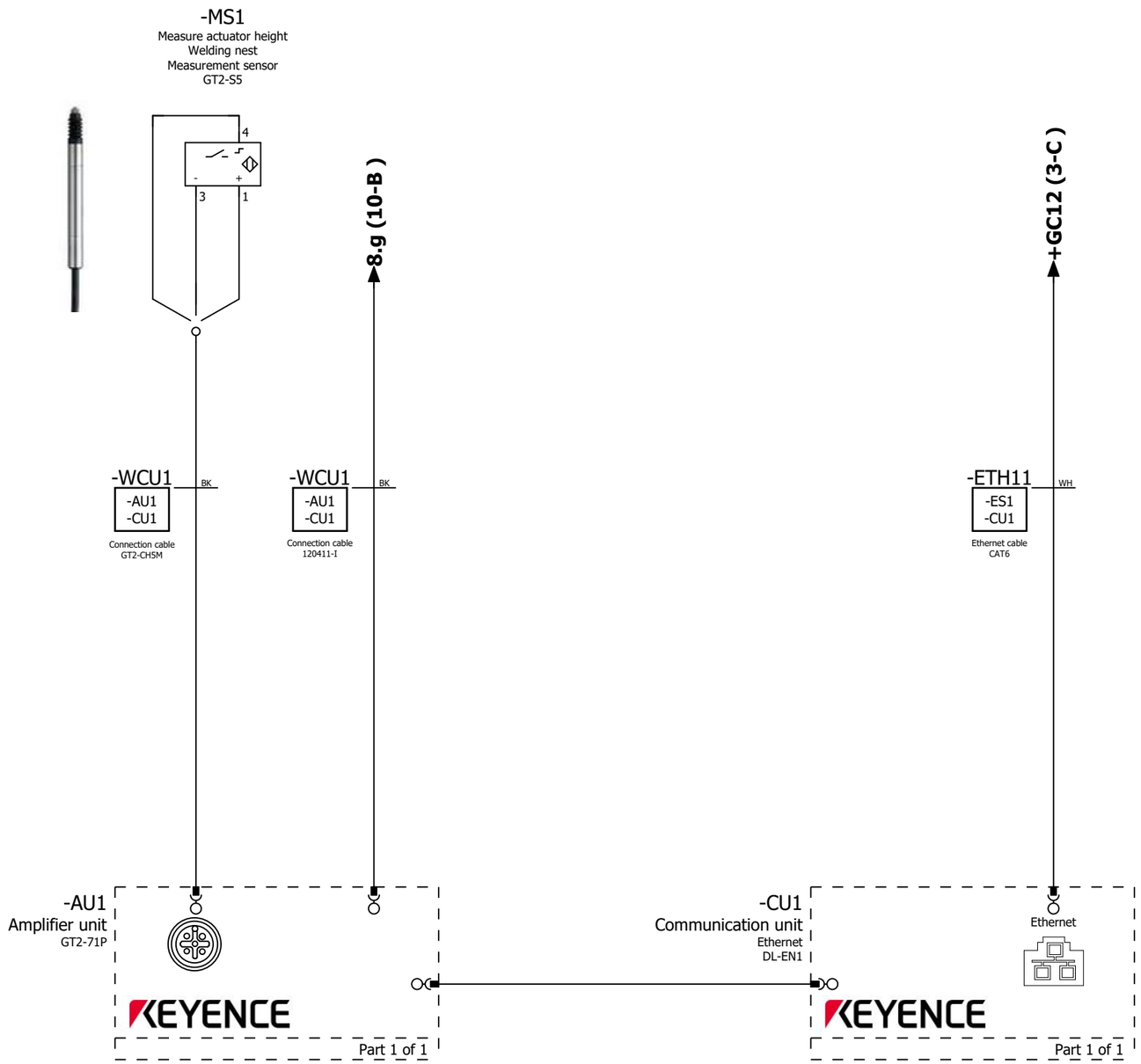

Automatyco®	Automatización, Mantenimiento y Construcción Condominio Industrial Siglo 21, Av. Siglo 21 #50 int #115, Valle de Santa Cruz, CP 45640 Tlajomulco de Zuñiga, Jal, Mex.	O.P. 978	Created	05/01/2026	Project's name	Page name	Facility 24VCD
		Client: Pegatron	Modified	30/03/2026	ATLAS CP	Sensor connections	Mounting location SST
		PEGATRON	Revision	0	Station name		Sheet 9
			Responsible	A.Yepez	ST 30		Page 102 / 123

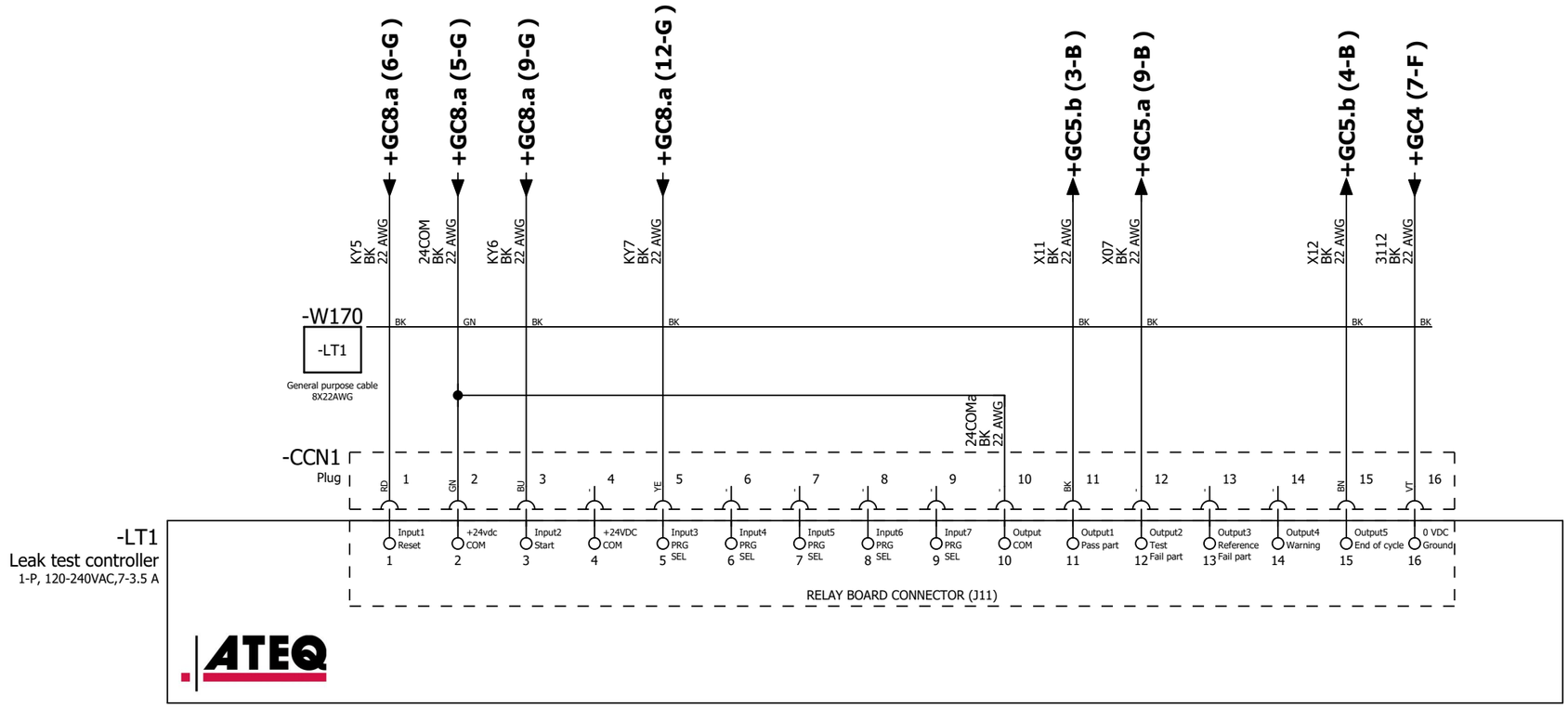

Automatyco® Automatización, Mantenimiento y Construcción Condominio Industrial Siglo 21, Av. Siglo 21 #50 int #115, Valle de Santa Cruz, CP 45640 Tlajomulco de Zuñiga, Jal, Mex.	O.P. 978	Created	05/01/2026	Project's name	Page name	Facility 24VCD
	Client: Pegatron PEGATRON	Modified	30/03/2026	ATLAS CP	Leak tester connections	Mounting location SST
		Revision	0	Station name		Sheet 10
		Responsible	A.Yepez	ST 30		Page 103 / 123

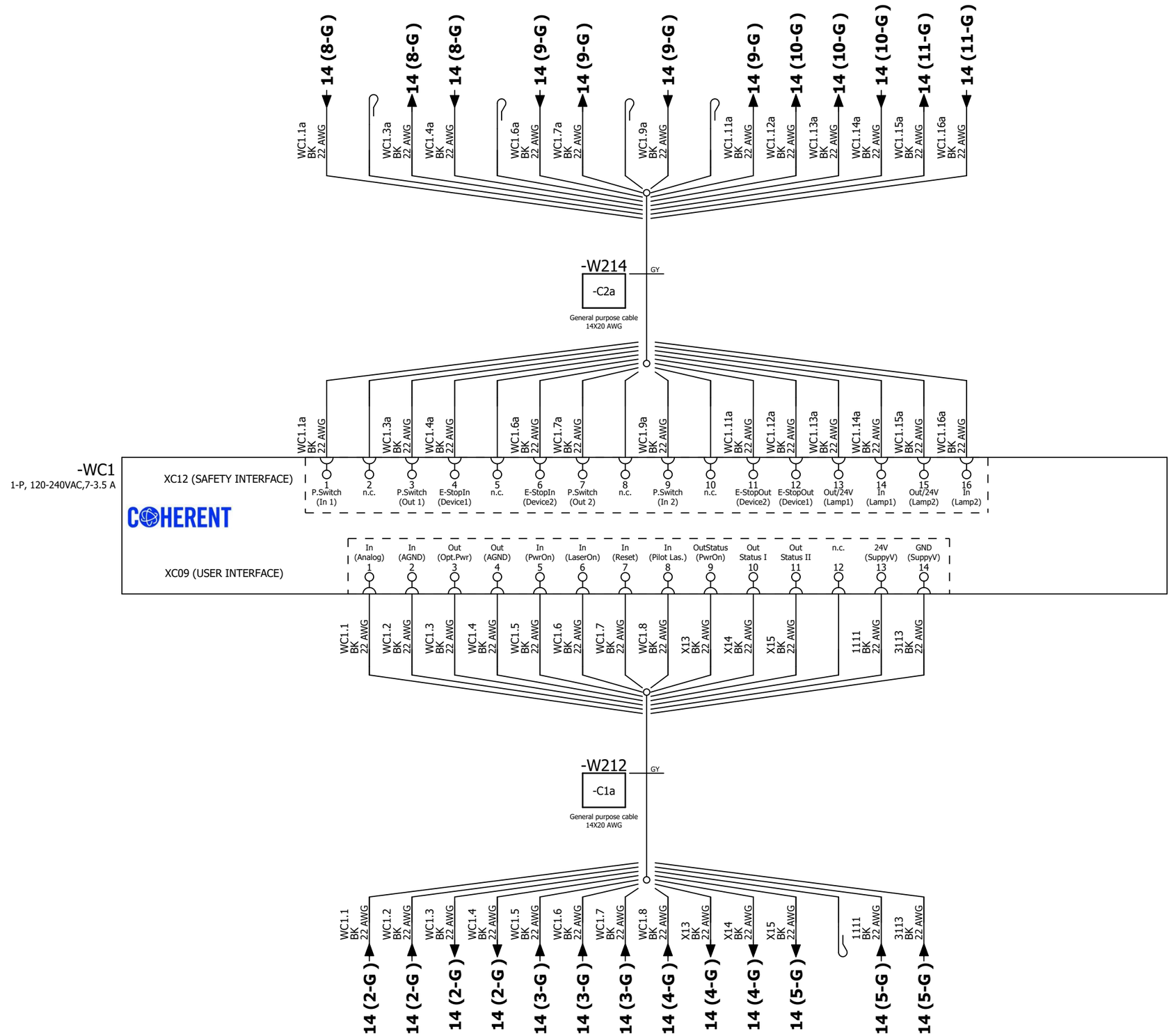
14 (8-G)
14 (8-G)
14 (8-G)
14 (9-G)
14 (9-G)
14 (9-G)
14 (10-G)
14 (10-G)
14 (10-G)
14 (11-G)
14 (11-G)
WC1.1a BK 22 AWG
WC1.3a BK 22 AWG
WC1.4a BK 22 AWG
WC1.6a BK 22 AWG
WC1.7a BK 22 AWG
WC1.9a BK 22 AWG
WC1.11a BK 22 AWG
WC1.12a BK 22 AWG
WC1.13a BK 22 AWG
WC1.14a BK 22 AWG
WC1.15a BK 22 AWG
WC1.16a BK 22 AWG
-W214
GY
-C2a
General purpose cable
14X20 AWG
-WC1
1-P, 120-240VAC,7-3.5 A
XC12 (SAFETY INTERFACE)
1 P.Switch (In 1)
2 n.c.
3 P.Switch (Out 1)
4 E-StopIn (Device1)
5 n.c.
6 E-StopIn (Device2)
7 P.Switch (Out 2)
8 n.c.
9 P.Switch (In 2)
10 n.c.
11 E-StopOut (Device2)
12 E-StopOut (Device1)
13 Out/24V (Lamp1)
14 In (Lamp1)
15 Out/24V (Lamp2)
16 In (Lamp2)
COHERENT
XC09 (USER INTERFACE)
1 In (Analog)
2 In (AGND)
3 Out (Opt.Pwr)
4 Out (AGND)
5 In (PwrOn)
6 In (LaserOn)
7 In (Reset)
8 In (Pilot Las.)
9 OutStatus (PwrOn)
10 Out Status I
11 Out Status II
12 n.c.
13 24V (SuppyV)
14 GND (SuppyV)
WC1.1 BK 22 AWG
WC1.2 BK 22 AWG
WC1.3 BK 22 AWG
WC1.4 BK 22 AWG
WC1.5 BK 22 AWG
WC1.6 BK 22 AWG
WC1.7 BK 22 AWG
WC1.8 BK 22 AWG
X13 BK 22 AWG
X14 BK 22 AWG
X15 BK 22 AWG
1111 BK 22 AWG
3113 BK 22 AWG
-W212
GY
-C1a
General purpose cable
14X20 AWG
14 (2-G)
14 (2-G)
14 (2-G)
14 (2-G)
14 (3-G)
14 (3-G)
14 (3-G)
14 (4-G)
14 (4-G)
14 (4-G)
14 (5-G)
14 (5-G)
14 (5-G)

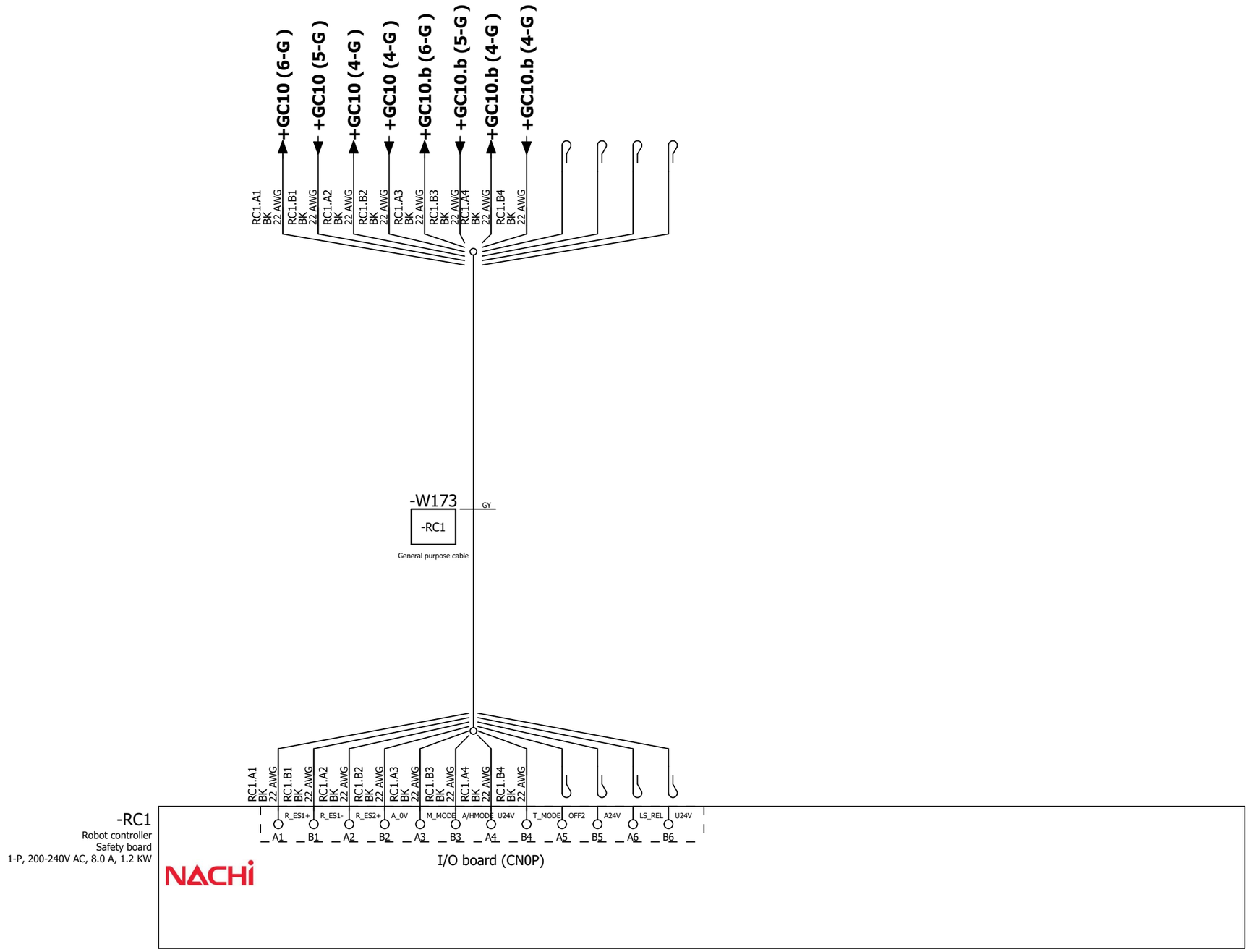

Automatyco®	Automatización, Mantenimiento y Construcción Condominio Industrial Siglo 21, Av. Siglo 21 #50 int #115, Valle de Santa Cruz, CP 45640 Tlajomulco de Zuñiga, Jal, Mex.	O.P. 978	Created	05/01/2026	Project's name	Page name	Facility 24VCD
		Client: Pegatron	Modified	01/06/2026	ATLAS CP	Robot controller connections	Mounting location SST
		PEGATRON	Revision	0	Station name		Sheet 12
			Responsible	A.Yepez	ST 30		Page 105 / 123

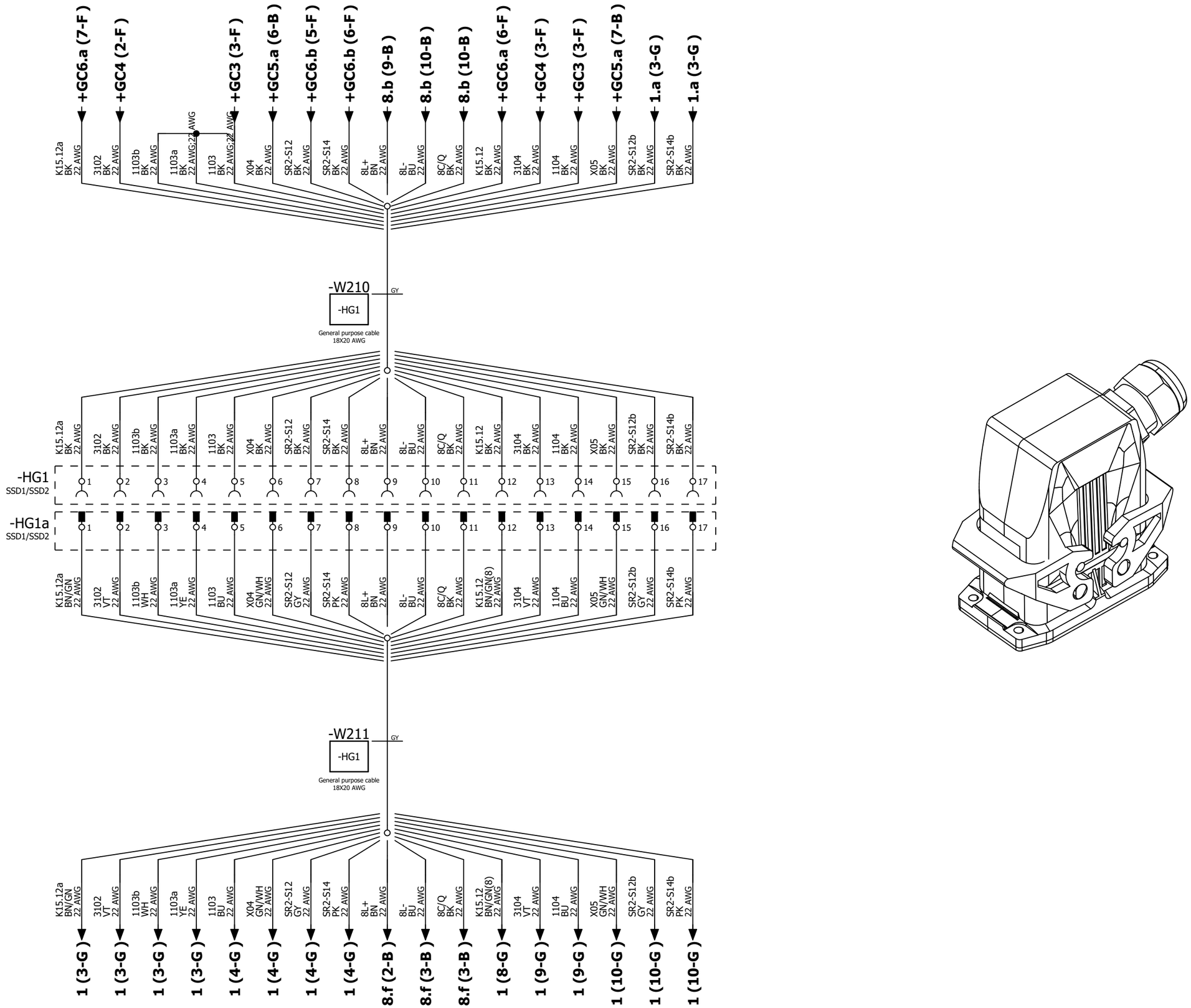
+GC6.a (7-F)
+GC4 (2-F)
+GC3 (3-F)
+GC5.a (6-B)
+GC6.b (5-F)
+GC6.b (6-F)
8.b (9-B)
8.b (10-B)
8.b (10-B)
+GC6.a (6-F)
+GC4 (3-F)
+GC3 (3-F)
+GC5.a (7-B)
1.a (3-G)
1.a (3-G)
K15.12a BK 22 AWG
3102 BK 22 AWG
1103b BK 22 AWG
1103a BK 22 AWG;22 AWG
1103 BK 22 AWG;22 AWG
X04 BK 22 AWG
SR2-S12 BK 22 AWG
SR2-S14 BK 22 AWG
8L+ BN 22 AWG
8L- BU 22 AWG
8C/Q BK 22 AWG
K15.12 BK 22 AWG
3104 BK 22 AWG
1104 BK 22 AWG
X05 BK 22 AWG
SR2-S12b BK 22 AWG
SR2-S14b BK 22 AWG
-W210
GY
-HG1
General purpose cable
18X20 AWG
-HG1
SSD1/SSD2
-HG1a
SSD1/SSD2
K15.12a BN/GN 22 AWG
3102 VT 22 AWG
1103b WH 22 AWG
1103a YE 22 AWG
1103 BU 22 AWG
X04 GN/WH 22 AWG
SR2-S12 GY 22 AWG
SR2-S14 PK 22 AWG
8L+ BN 22 AWG
8L- BU 22 AWG
8C/Q BK 22 AWG
K15.12 BN/GN(8) 22 AWG
3104 VT 22 AWG
1104 BU 22 AWG
X05 GN/WH 22 AWG
SR2-S12b GY 22 AWG
SR2-S14b PK 22 AWG
-W211
GY
-HG1
General purpose cable
18X20 AWG
1 (3-G)
1 (3-G)
1 (3-G)
1 (3-G)
1 (4-G)
1 (4-G)
1 (4-G)
1 (4-G)
8.f (2-B)
8.f (3-B)
8.f (3-B)
1 (8-G)
1 (9-G)
1 (9-G)
1 (10-G)
1 (10-G)
1 (10-G)

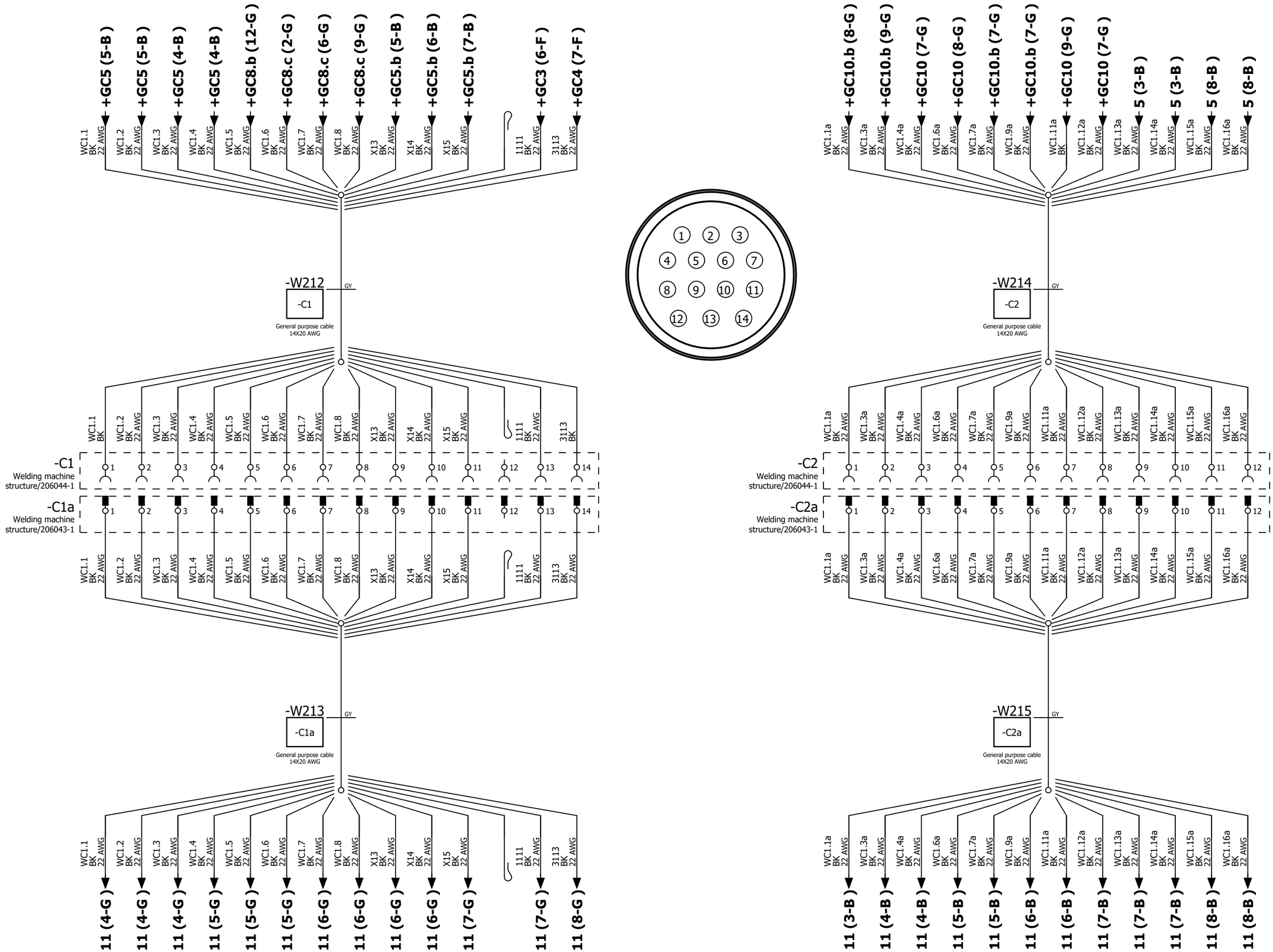

Automatyco®	Automatización, Mantenimiento y Construcción Condominio Industrial Siglo 21, Av. Siglo 21 #50 int #115, Valle de Santa Cruz, CP 45640 Tlajomulco de Zuñiga, Jal, Mex.	O.P. 978	Created	05/01/2026	Project's name	Page name	Facility 24VCD
		Client: Pegatron PEGATRON	Modified	01/06/2026	ATLAS CP	Conector connections	Mounting location SST
			Revision	0	Station name		Sheet 14
			Responsible	A.Yepez	ST 30		Page 107 / 123

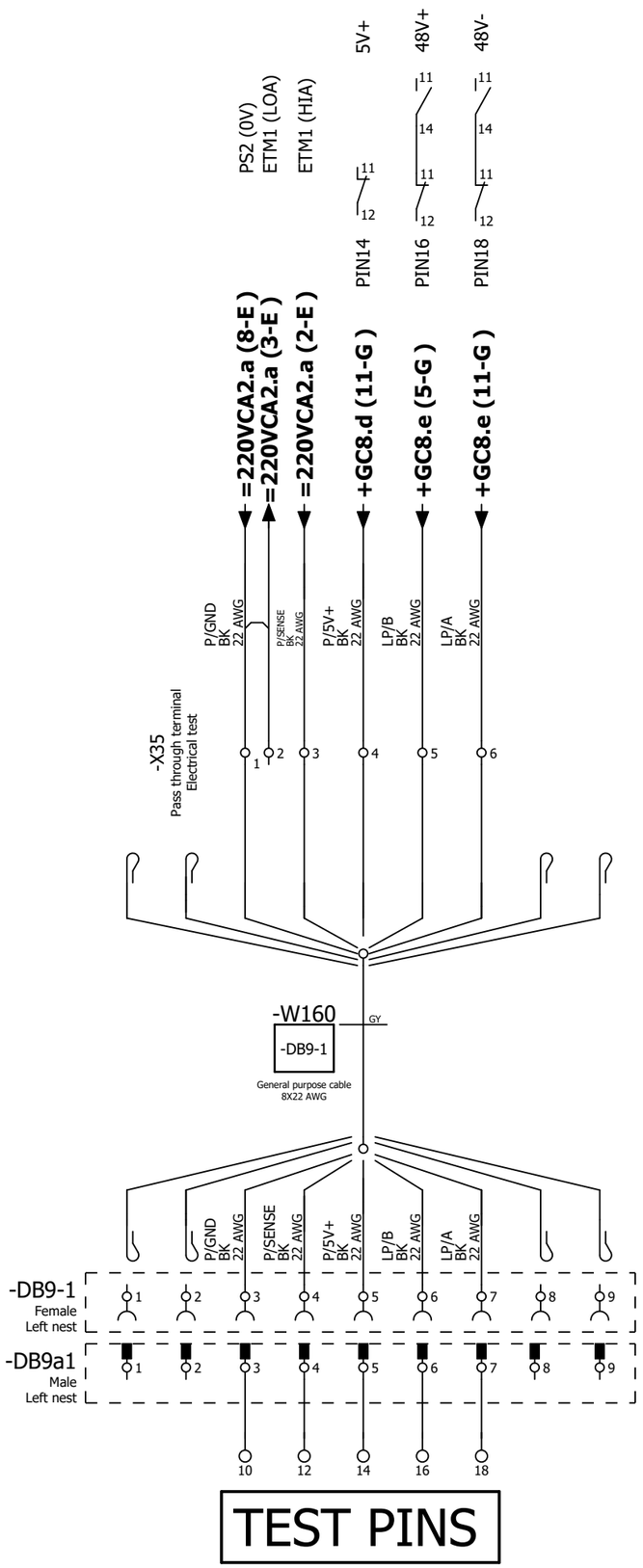

CYCLE LATCH 2x:
- APPLY VOLTAGE (PIN 16 TO 18): 48±1V CYCLE 1, -48±1V CYCLE 2
- TEST TIME: 200±10 ms
- CURRENT: 5 MAX

RECORD POTENTIOMETER RESPONSE:
- APPLY VOLTAGE (PIN 14 TO 10): 5±0.5V
- MONITOR VOLTAGE (PIN 12 TO 10)
- MONITOR LATCH MOTION WITH VISION

DT IDENTIFIER:
00004383-DT

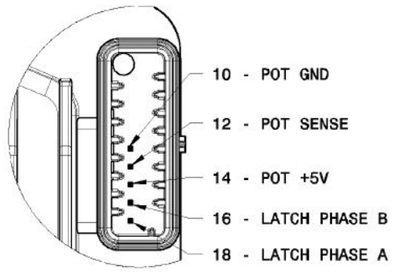

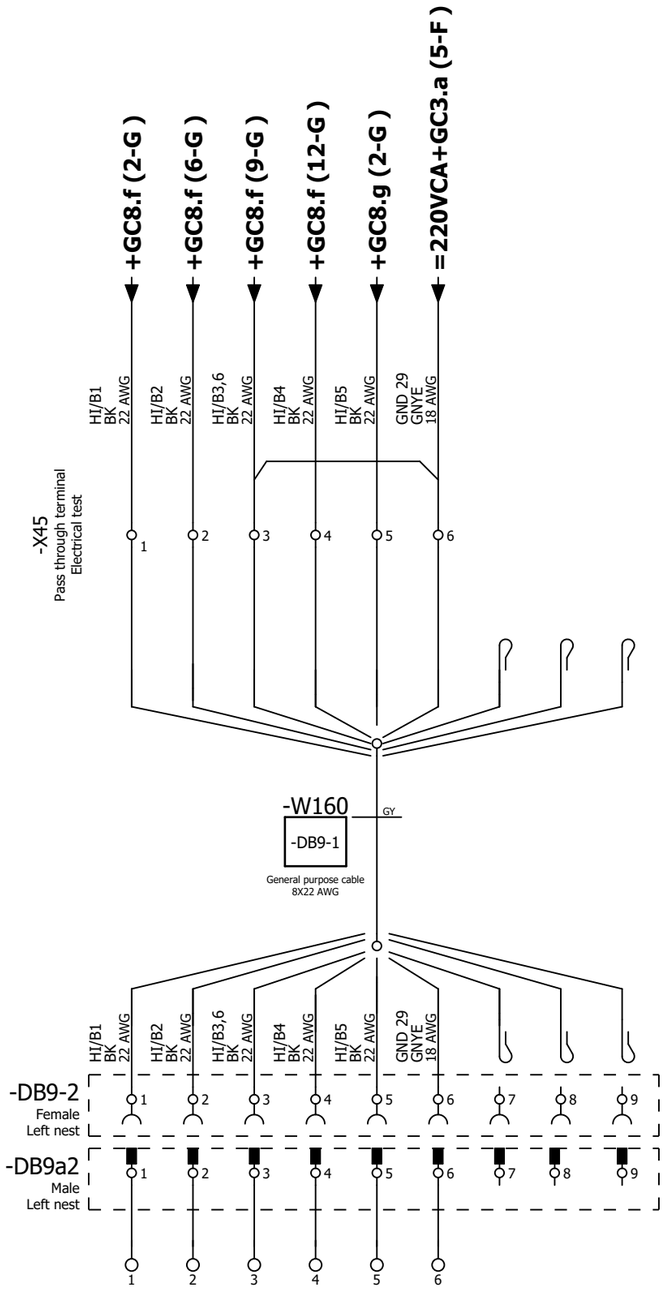

TEST AT AMBIENT 23±3 C
PROBE RESISTANCE BETWEEN:
- PIN 7 TO 6
- PIN 8 TO 6

PROBE CONTINUITY BETWEEN:

MCS SIDE INLET PINS	INLET HEADER PINS
CE	1
ID	2
PE	3,6
PHY 1	4
PHY 2	5

DT IDENTIFIER:
00004018-DT

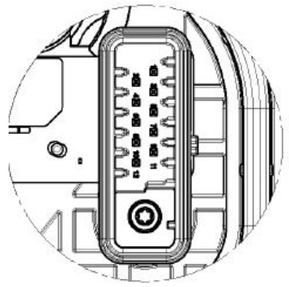

PIN	NAME
1	MCS_CE
2	MCS_ID
3	MCS_PE
4	PHY_P/1
5	PHY_N/2
6	GND
7	PIN_TEMP_1
8	PIN_TEMP_2
9	INLET_ID

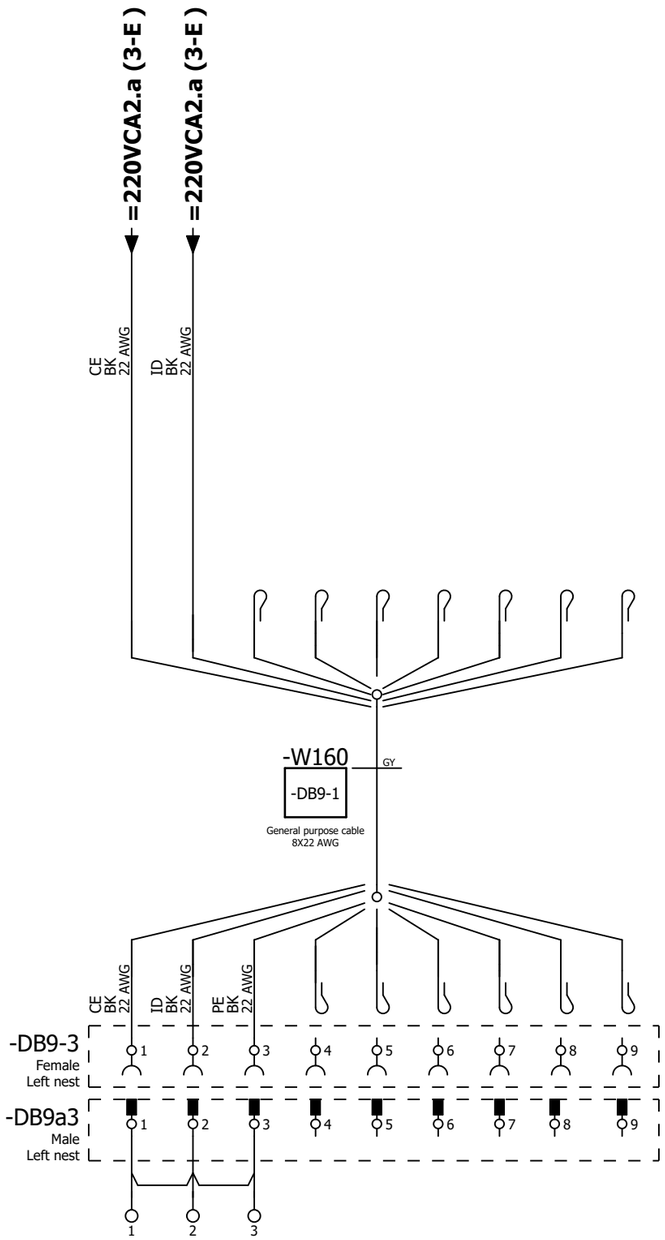

TEST PINS

TEST AT AMBIENT 23±3 C
PROBE RESISTANCE BETWEEN:
- PIN 7 TO 6
- PIN 8 TO 6

PROBE CONTINUITY BETWEEN:

MCS SIDE INLET PINS	INLET HEADER PINS
CE	1
ID	2
PE	3,6
PHY 1	4
PHY 2	5

DT IDENTIFIER:
00004018-DT

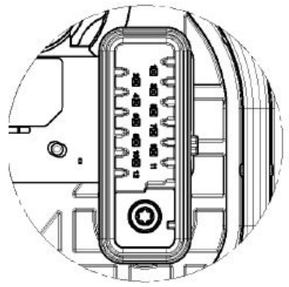

PIN	NAME
1	MCS_CE
2	MCS_ID
3	MCS_PE
4	PHY_P/1
5	PHY_N/2
6	GND
7	PIN_TEMP_1
8	PIN_TEMP_2
9	INLET_ID

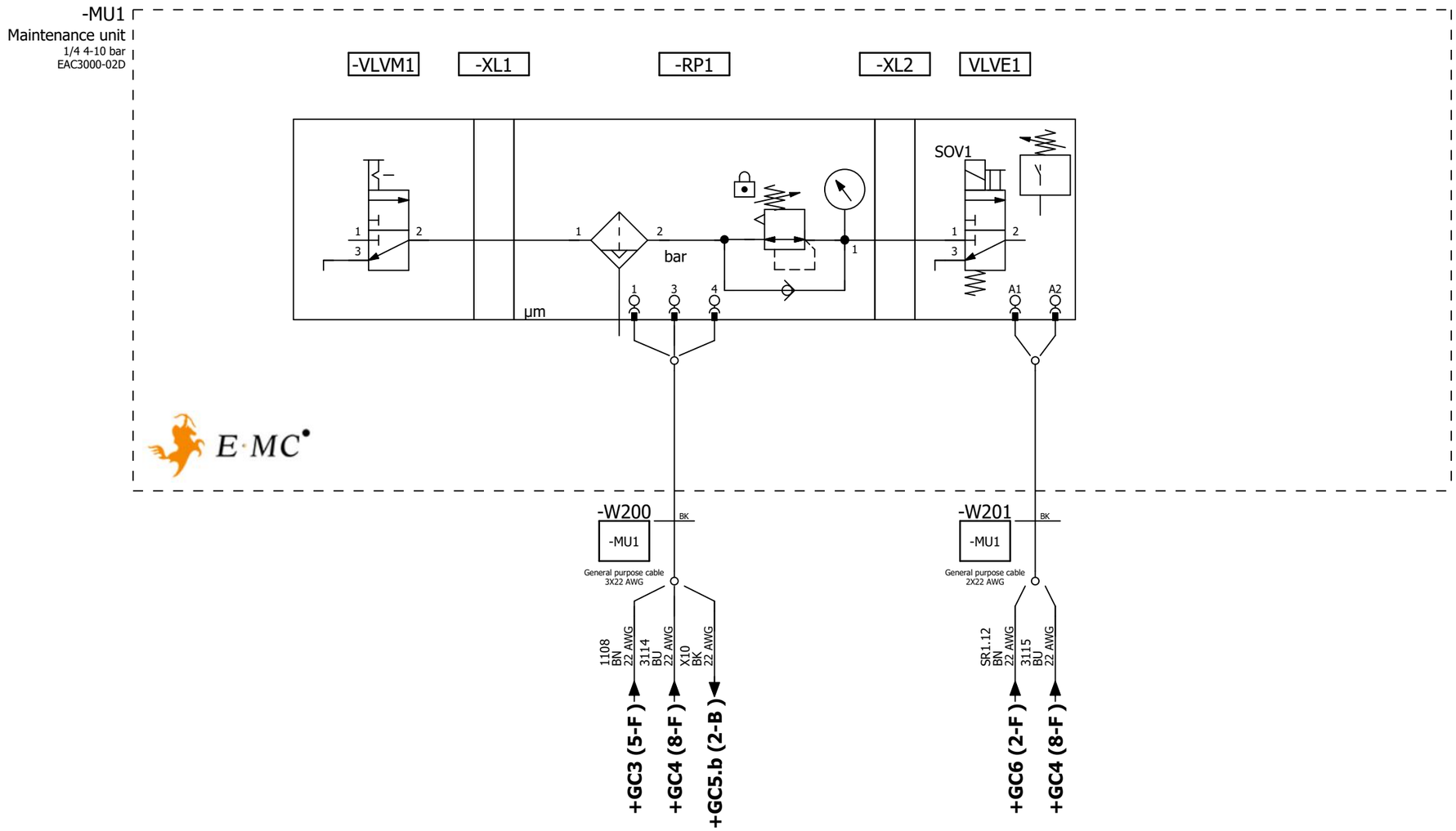

Automatyco® Automatización, Mantenimiento y Construcción Condominio Industrial Siglo 21, Av. Siglo 21 #50 int #115, Valle de Santa Cruz, CP 45640 Tlajomulco de Zuñiga, Jal, Mex.	O.P. 978	Created	05/01/2026	Project's name	Page name	Facility	24VCD
	Client: Pegatron PEGATRON	Modified	01/06/2026	ATLAS CP	Mantenance unit connections	Mounting location	PN
		Revision	0	Station name		Sheet	1
		Responsible	A.Yepez	ST 30		Page	111 / 123

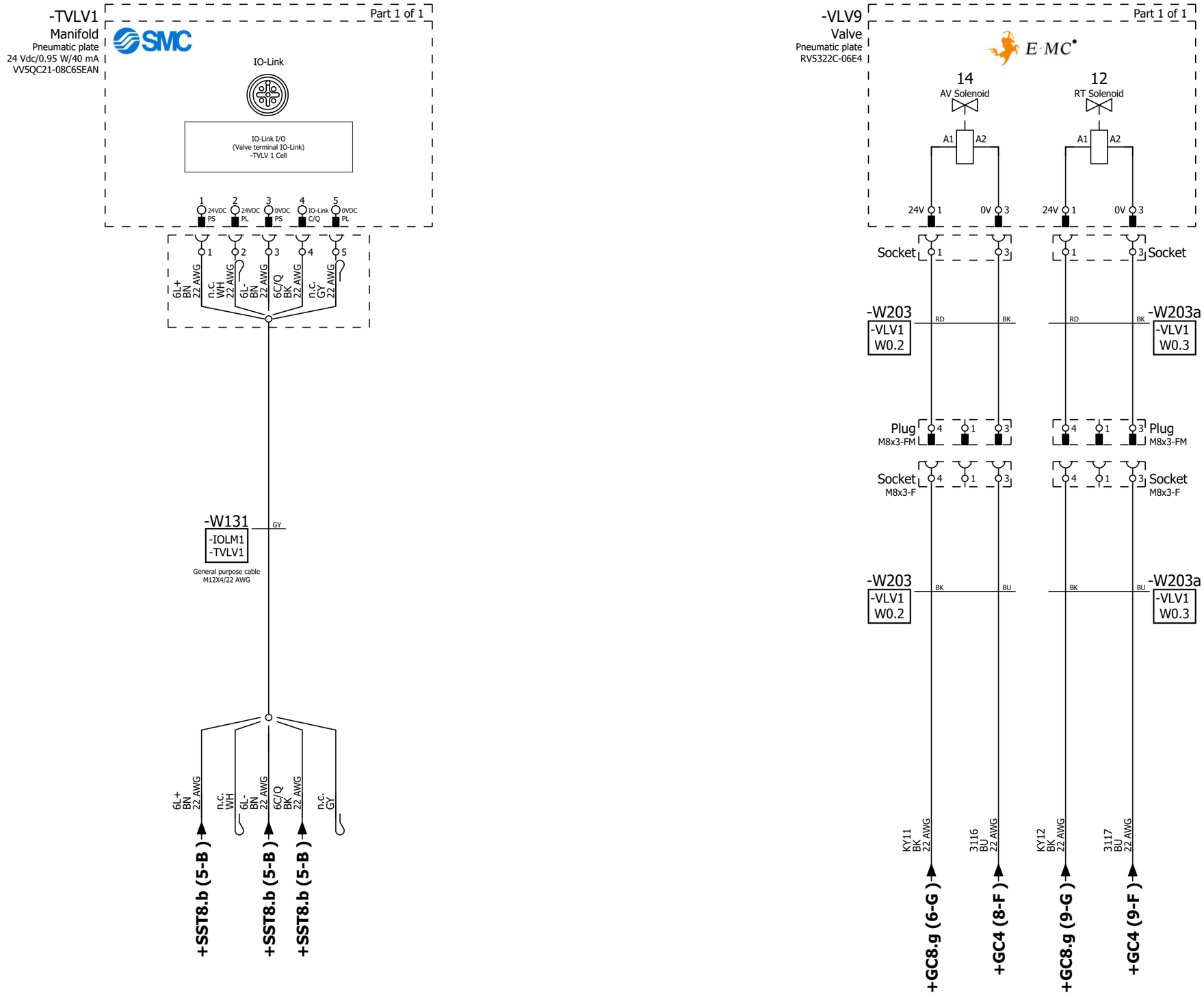

Automatyco® Automatización, Mantenimiento y Construcción Condominio Industrial Siglo 21, Av. Siglo 21 #50 int #115, Valle de Santa Cruz, CP 45640 Tlajomulco de Zuñiga, Jal, Mex.	O.P. 978	Created	05/01/2026	Project's name	Page name	Facility 24VCD
	Client: Pegatron PEGATRON	Modified	31/03/2026	ATLAS CP	Solenoid connections	Mounting location PN
		Revision	0	Station name		Sheet 2
		Responsible	A.Yepez	ST 30		Page 112 / 123

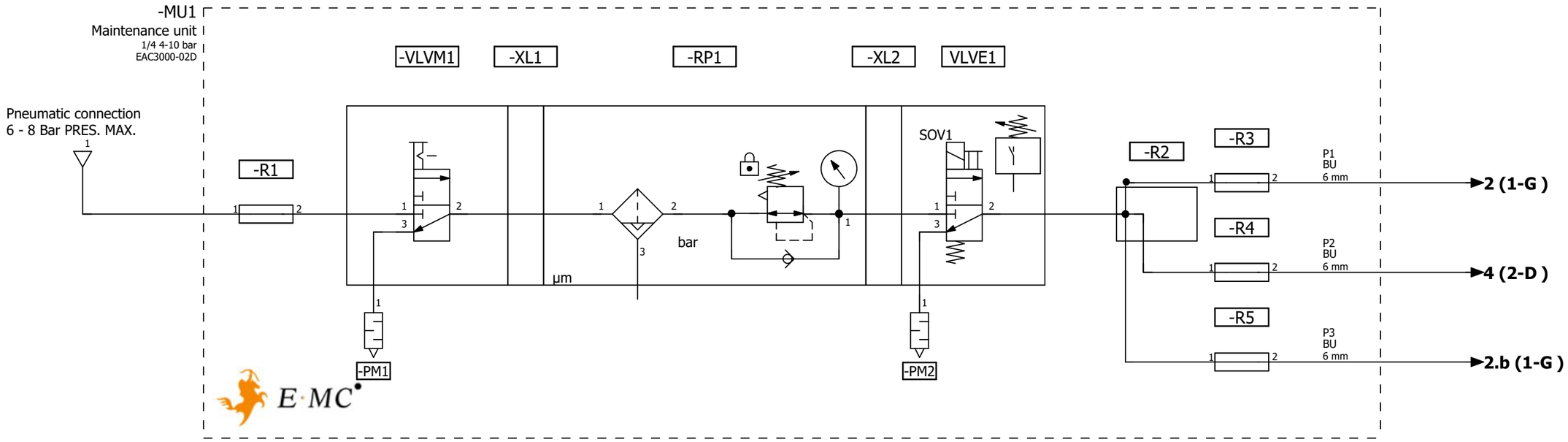

Automatyco®	Automatización, Mantenimiento y Construcción Condominio Industrial Siglo 21, Av. Siglo 21 #50 int #115, Valle de Santa Cruz, CP 45640 Tlajomulco de Zuñiga, Jal, Mex.	O.P. 978	Created	05/01/2026	Project's name	Page name	Facility PNEU(Pneumatics)
		Client: Pegatron	Modified	01/06/2026	ATLAS CP	Maintenance unit connections	Mounting location SST
		PEGATRON	Revision	0	Station name		Sheet 1
			Responsible	A.Yepez	ST 30		Page 113 / 123

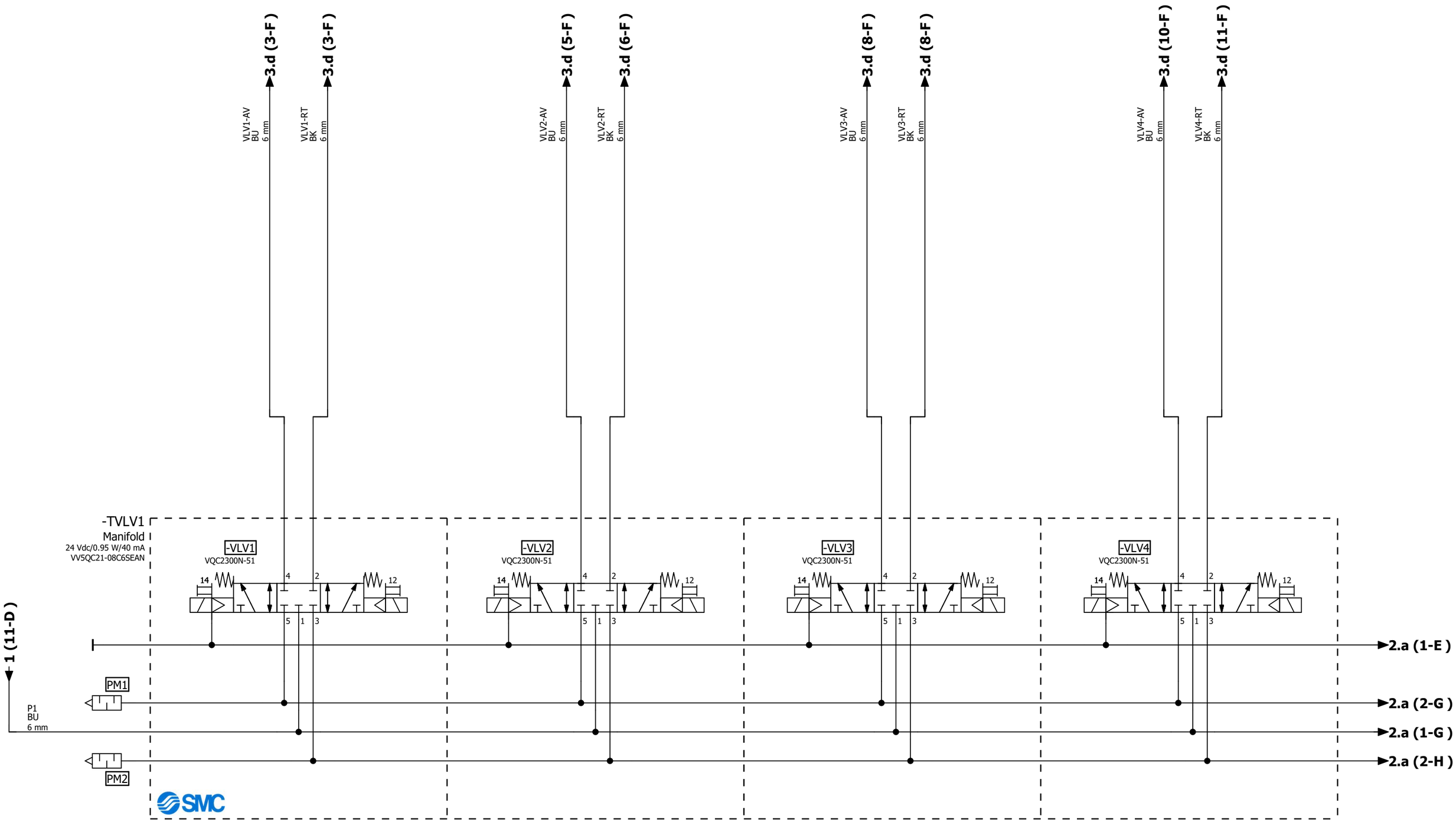
VLV1-AV
BU
6 mm
3.d (3-F)
VLV1-RT
BK
6 mm
3.d (3-F)
VLV2-AV
BU
6 mm
3.d (5-F)
VLV2-RT
BK
6 mm
3.d (6-F)
VLV3-AV
BU
6 mm
3.d (8-F)
VLV3-RT
BK
6 mm
3.d (8-F)
VLV4-AV
BU
6 mm
3.d (10-F)
VLV4-RT
BK
6 mm
3.d (11-F)
-TVLV1
Manifold
24 Vdc/0.95 W/40 mA
VV5QC21-08C6SEAN
-VLV1
VQC2300N-51
-VLV2
VQC2300N-51
-VLV3
VQC2300N-51
-VLV4
VQC2300N-51
14
4
2
12
5
1
3
1 (11-D)
PM1
PM2
P1
BU
6 mm
2.a (1-E)
2.a (2-G)
2.a (1-G)
2.a (2-H)
SMC

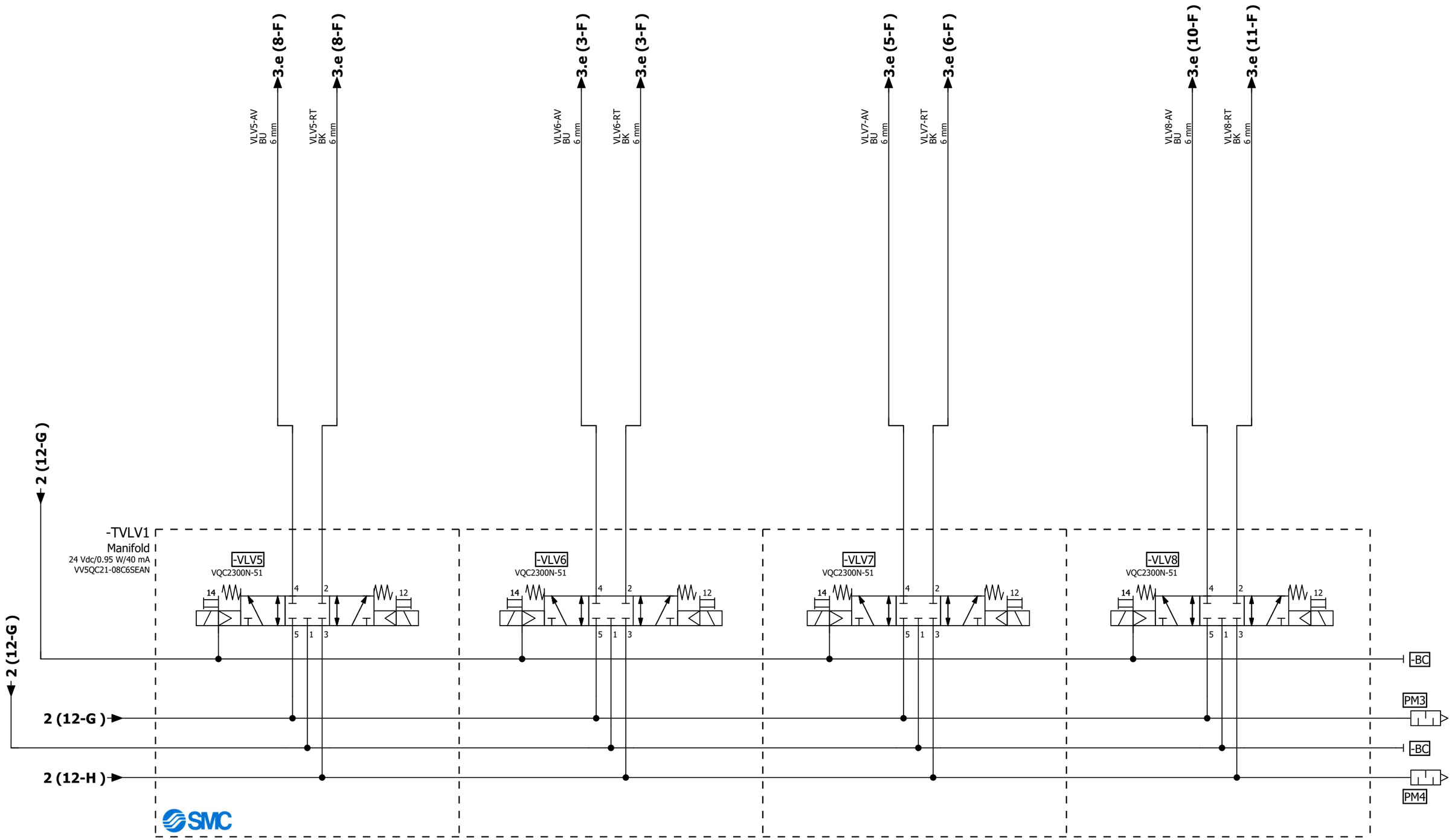

Automatyco®	Automatización, Mantenimiento y Construcción Condominio Industrial Siglo 21, Av. Siglo 21 #50 int #115, Valle de Santa Cruz, CP 45640 Tlajomulco de Zuñiga, Jal, Mex.	O.P. 978	Created	05/01/2026	Project's name	Page name	Facility PNEU(Pneumatics)
		Client: Pegatron	Modified	01/06/2026	ATLAS CP	Valve terminal connections	Mounting location SST
		PEGATRON	Revision	0	Station name		Sheet 2.a
			Responsible	A.Yepez	ST 30		Page 115 / 123

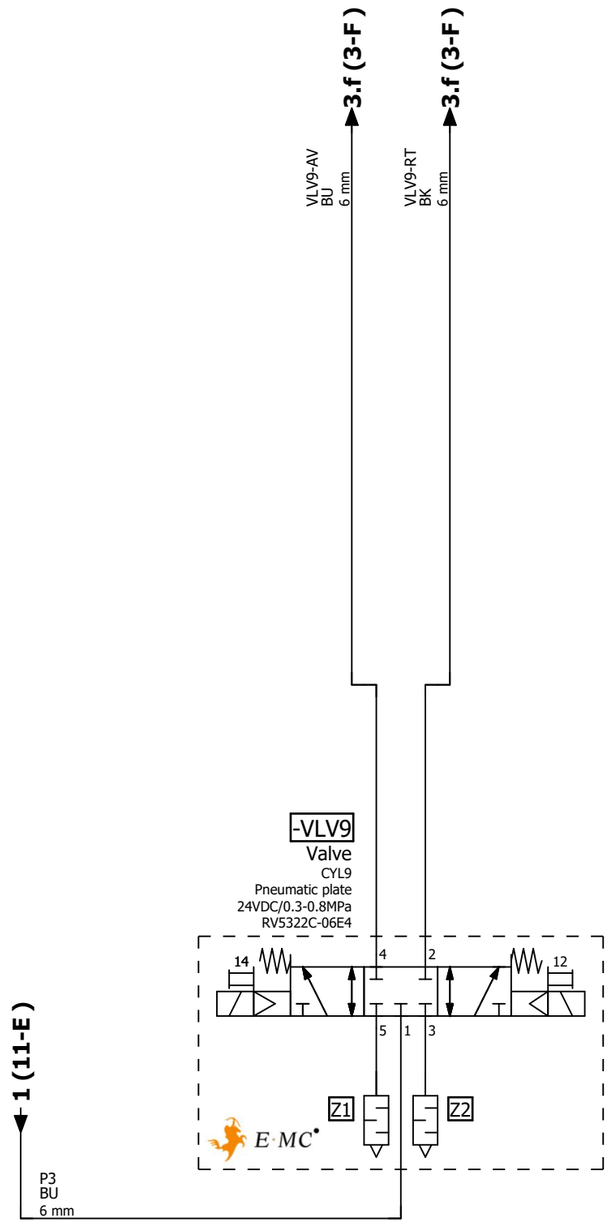

Automatyco®
Automatización, Mantenimiento y Construcción
Condominio Industrial Siglo 21, Av. Siglo 21 #50 int #115, Valle de Santa Cruz, CP 45640
Tlajomulco de Zuñiga, Jal, Mex.

O.P. 978	Created	17/02/2026	Project's name	Page name	Facility PNEU(Pneumatics)
Client: Pegatron	Modified	31/03/2026	ATLAS CP	Valve terminal connections	Mounting location SST
PEGATRON	Revision	0	Station name		Sheet 2.b
	Responsible	A.Yepez	ST 30		Page 116 / 123

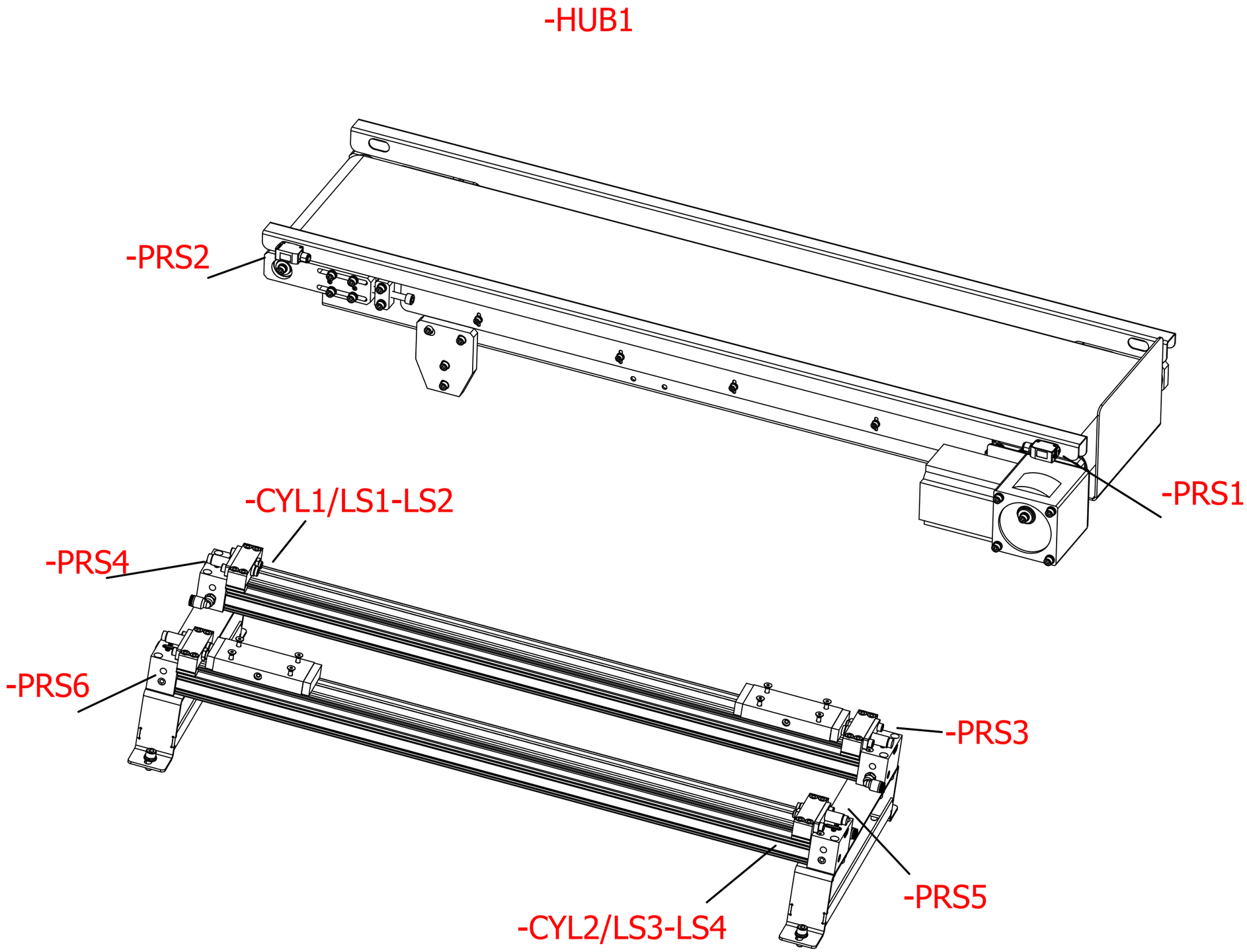

Automatyco®	Automatización, Mantenimiento y Construcción Condominio Industrial Siglo 21, Av. Siglo 21 #50 int #115, Valle de Santa Cruz, CP 45640 Tlajomulco de Zuñiga, Jal, Mex.	O.P. 978	Created	17/02/2026	Project's name	Page name	Facility PNEU(Pneumatics)
		Client: Pegatron	Modified	17/02/2026	ATLAS CP	Layout cylinders	Mounting location SST
		PEGATRON	Revision	0	Station name		Sheet 3
			Responsible	A.Yepez	ST 30		Page 117 / 123

-HUB2

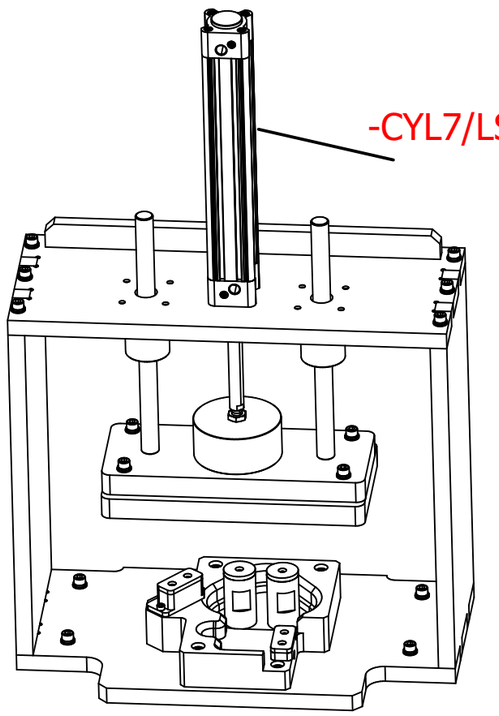

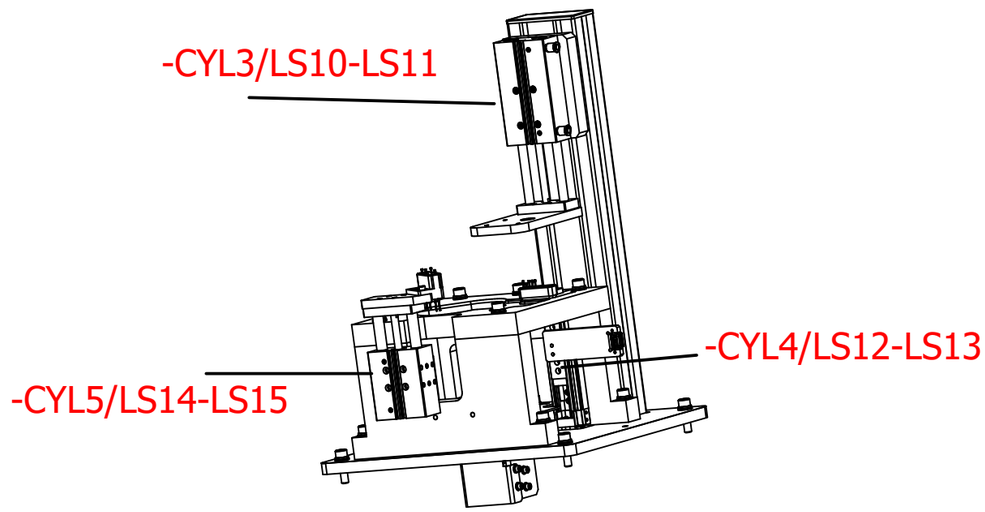

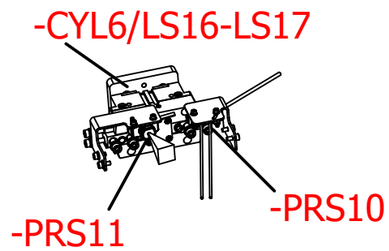

Automatyco®	Automatización, Mantenimiento y Construcción Condominio Industrial Siglo 21, Av. Siglo 21 #50 int #115, Valle de Santa Cruz, CP 45640 Tlajomulco de Zuñiga, Jal, Mex.	O.P. 978	Created	17/02/2026	Project's name	Page name	Facility PNEU(Pneumatics)
		Client: Pegatron PEGATRON	Modified	17/02/2026	ATLAS CP	Layout cylinders	Mounting location SST
			Revision	0	Station name		Sheet 3.a
			Responsible	A.Yepez	ST 30		Page 118 / 123

-HUB3

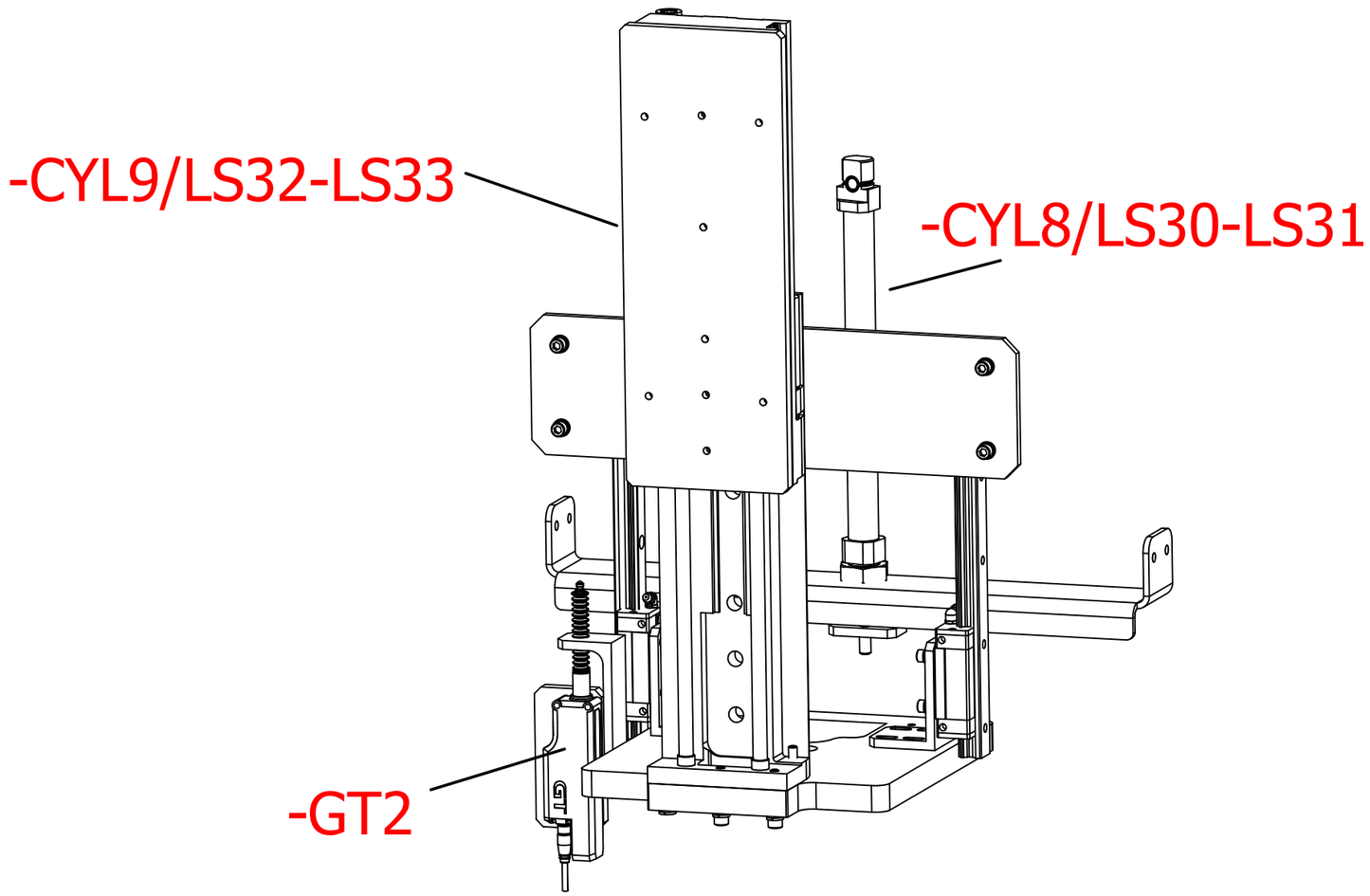

Automatyco® Automatización, Mantenimiento y Construcción Condominio Industrial Siglo 21, Av. Siglo 21 #50 int #115, Valle de Santa Cruz, CP 45640 Tlajomulco de Zuñiga, Jal, Mex.	O.P. 978	Created	17/02/2026	Project's name	Page name	Facility	PNEU(Pneumatics)
	Client: Pegatron PEGATRON	Modified	17/02/2026	ATLAS CP	Layout cylinders	Mounting location	SST
		Revision	0	Station name		Sheet	3.b
		Responsible	A.Yepez	ST 30		Page	119 / 123

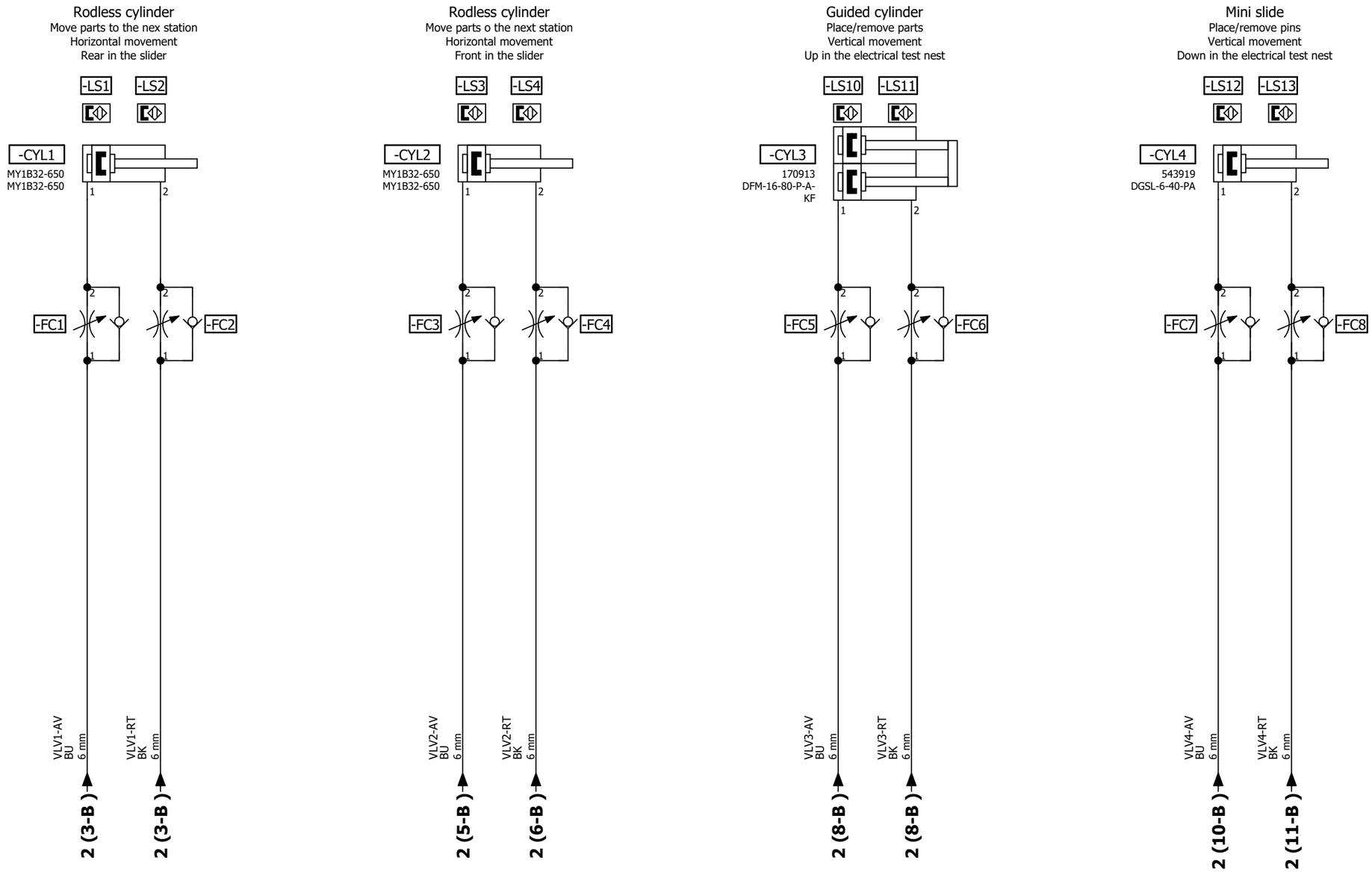

Automatyco®
Automatización, Mantenimiento y Construcción
Condominio Industrial Siglo 21, Av. Siglo 21 #50 int #115, Valle de Santa Cruz, CP 45640
Tlajomulco de Zuñiga, Jal, Mex.

O.P. 978	Created	05/01/2026	Project's name	Page name	Facility PNEU(Pneumatics)
Client: Pegatron	Modified	01/06/2026	ATLAS CP	Cylinders connections	Mounting location SST
PEGATRON	Revision	0	Station name		Sheet 3.d
	Responsible	A.Yepez	ST 30		Page 120 / 123

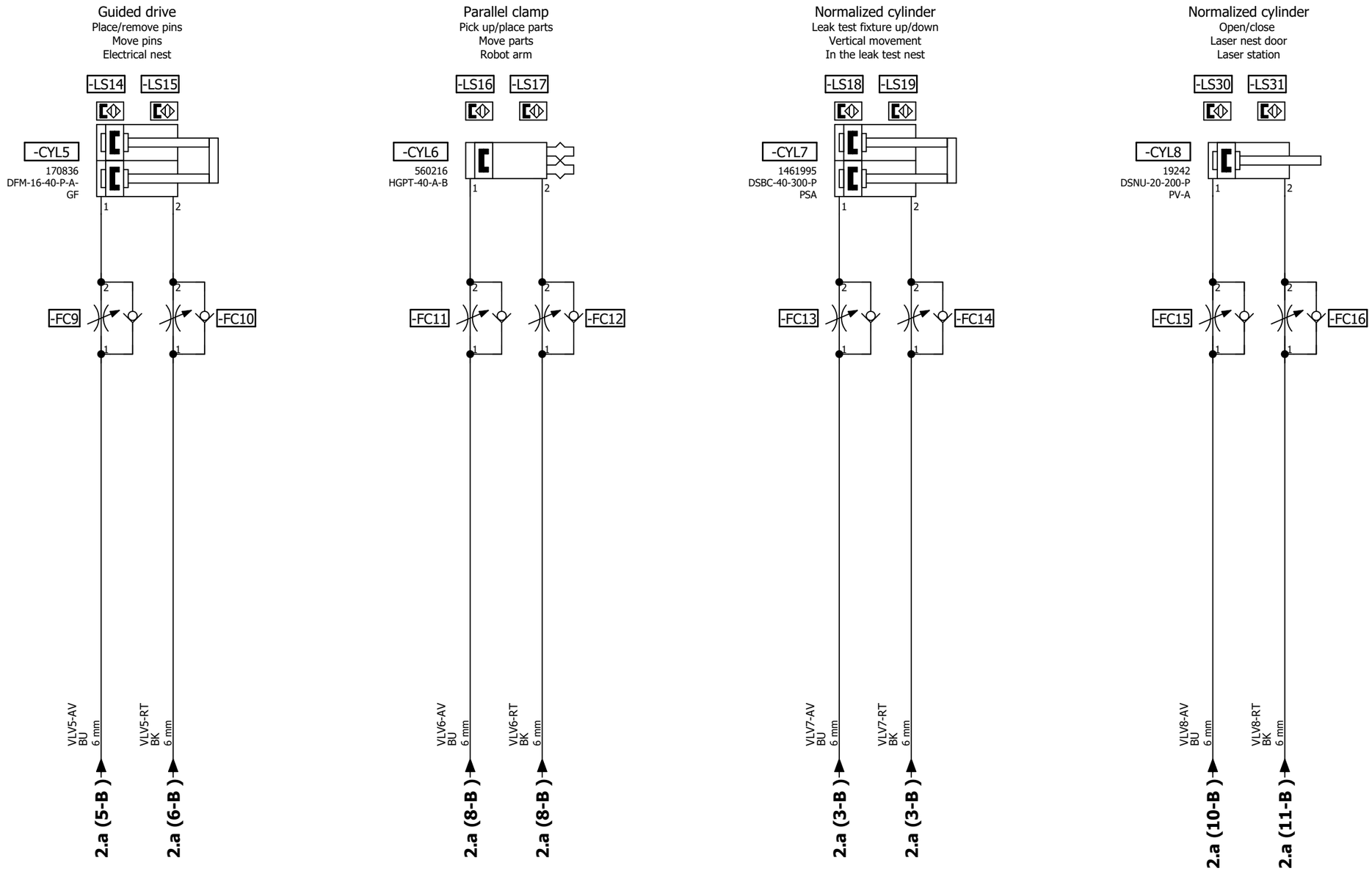
Guided drive
Place/remove pins
Move pins
Electrical nest
-LS14
-LS15
-CYL5
170836
DFM-16-40-P-A-GF
-FC9
-FC10
VLV5-AV
BU
6 mm
VLV5-RT
BK
6 mm
2.a (5-B)
2.a (6-B)
Parallel clamp
Pick up/place parts
Move parts
Robot arm
-LS16
-LS17
-CYL6
560216
HGPT-40-A-B
-FC11
-FC12
VLV6-AV
BU
6 mm
VLV6-RT
BK
6 mm
2.a (8-B)
2.a (8-B)
Normalized cylinder
Leak test fixture up/down
Vertical movement
In the leak test nest
-LS18
-LS19
-CYL7
1461995
DSBC-40-300-P
PSA
-FC13
-FC14
VLV7-AV
BU
6 mm
VLV7-RT
BK
6 mm
2.a (3-B)
2.a (3-B)
Normalized cylinder
Open/close
Laser nest door
Laser station
-LS30
-LS31
-CYL8
19242
DSNU-20-200-P
PV-A
-FC15
-FC16
VLV8-AV
BU
6 mm
VLV8-RT
BK
6 mm
2.a (10-B)
2.a (11-B)

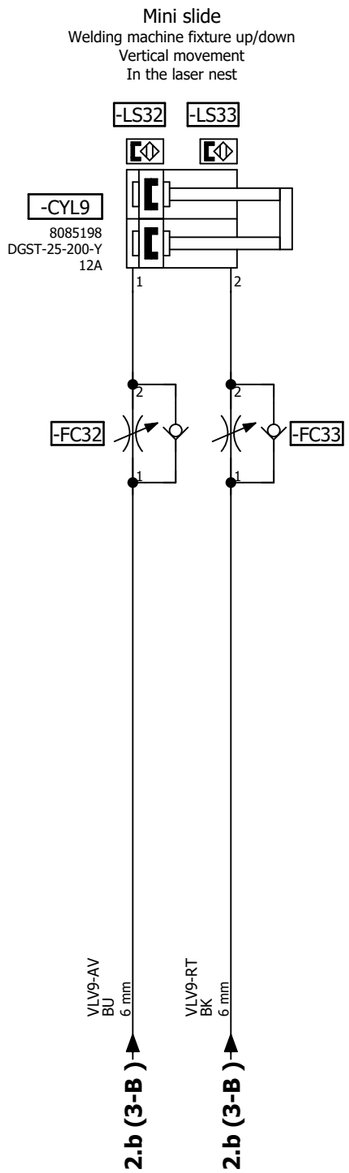

Automatyco®
Automatización,
Mantenimiento y Construcción
Condominio Industrial Siglo 21,
Av. Siglo 21 #50 int #115,
Valle de Santa Cruz, CP 45640
Tlajomulco de Zuñiga, Jal, Mex.

O.P. 978	Created	16/02/2026	Project's name	Page name	Facility PNEU(Pneumatics)
Client: Pegatron	Modified	19/02/2026	ATLAS CP	Cylinders connections	Mounting location SST
PEGATRON	Revision	0	Station name		Sheet 3.f
	Responsible	A.Yepez	ST 30		Page 122 / 123

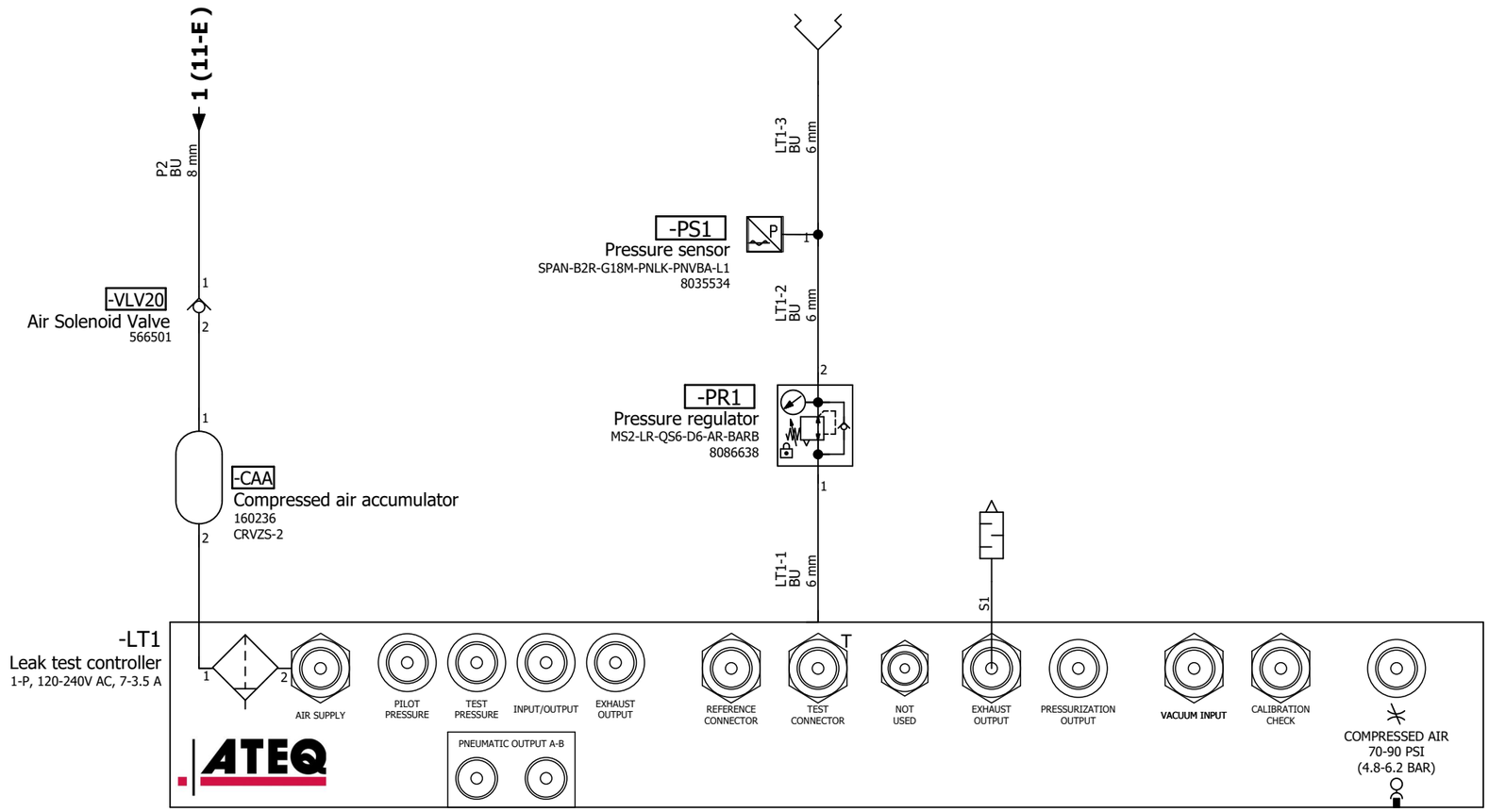

Automatyco®	Automatización, Mantenimiento y Construcción Condominio Industrial Siglo 21, Av. Siglo 21 #50 int #115, Valle de Santa Cruz, CP 45640 Tlajomulco de Zuñiga, Jal, Mex.	O.P. 978	Created	05/01/2026	Project's name	Page name	Facility PNEU(Pneumatics)
		Client: Pegatron	Modified	31/03/2026	ATLAS CP	Leak tester connections	Mounting location SST
		PEGATRON	Revision	0	Station name		Sheet 4
			Responsible	A.Yepez	ST 30		Page 123 / 123